What Might we do IF we used a 6U Crate

How Soon will we know???

Revised 4/21/04

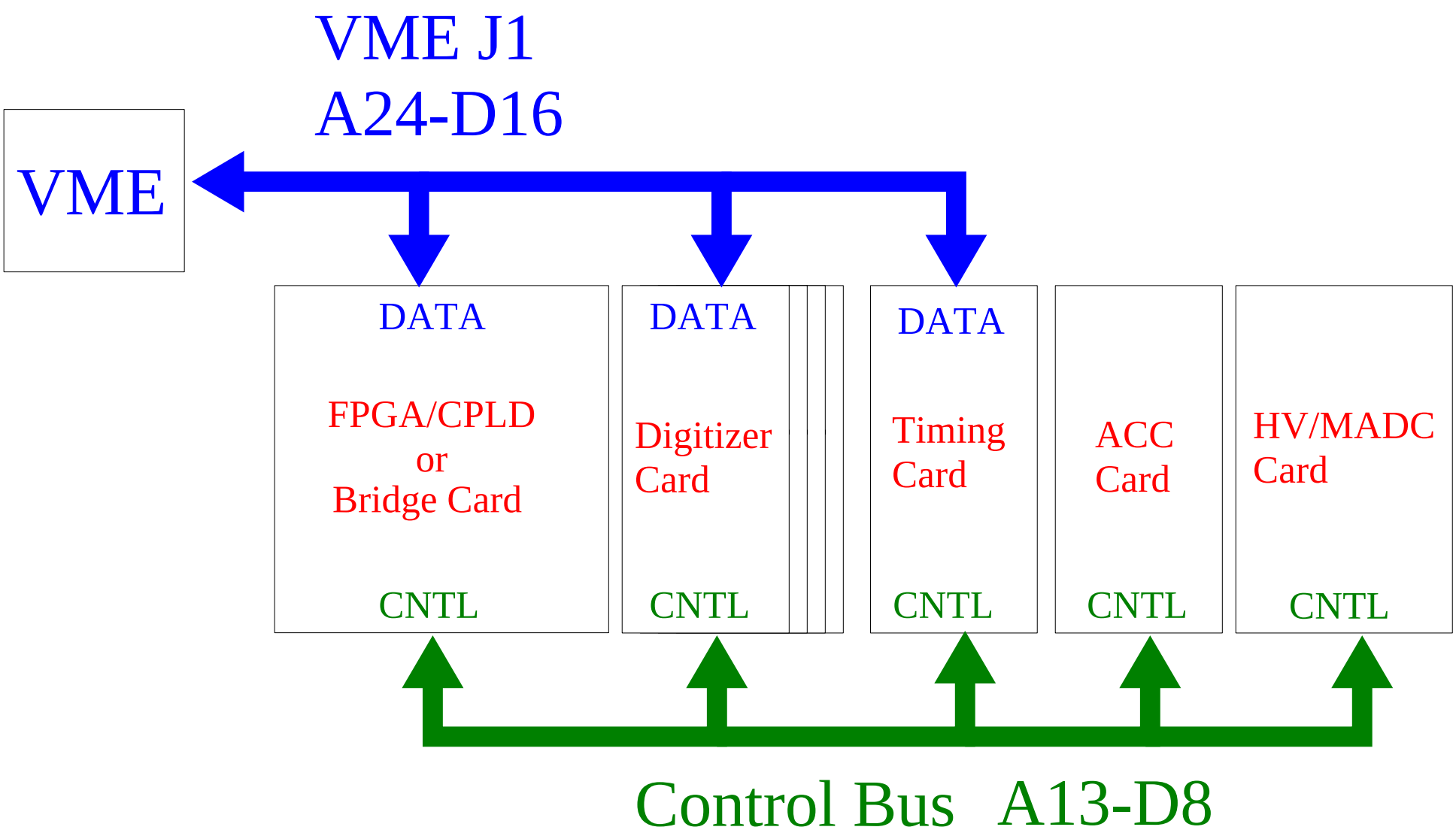

Revised 4/21/04

Tevatron BLM System....Abortable

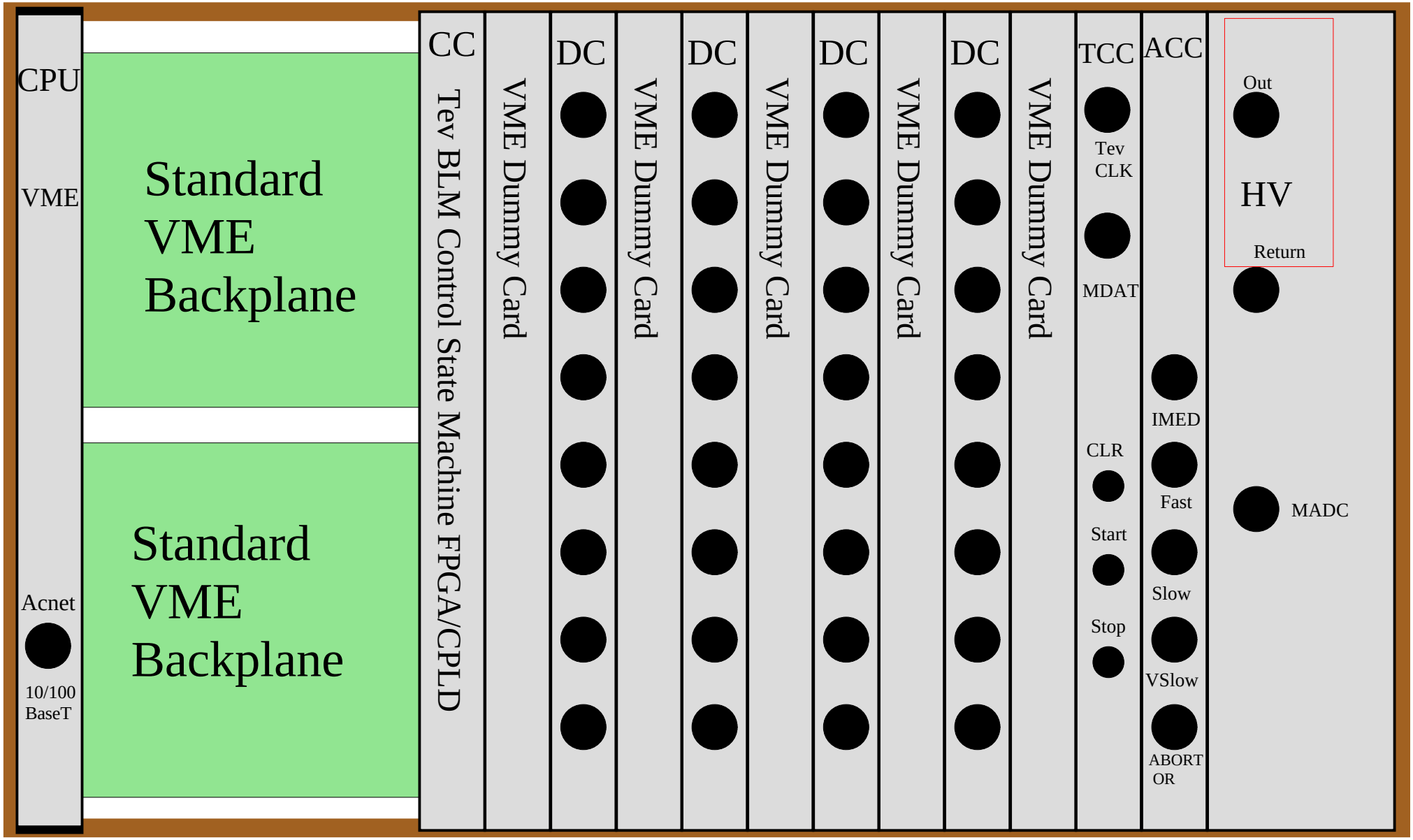

Revised 4/21/04

BLM Digitizer Card

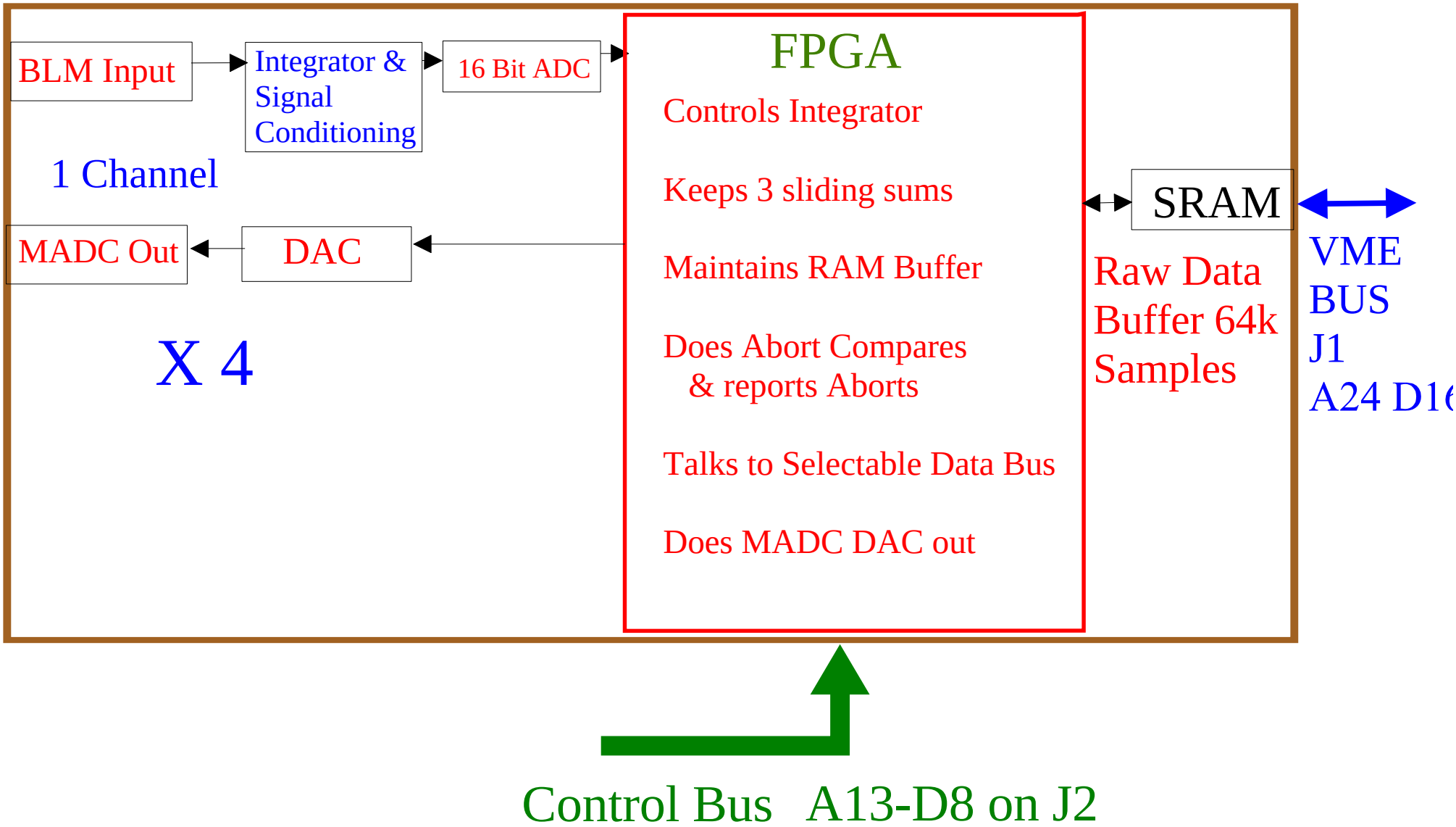

Revised 4/22/04

BLM Controller Card

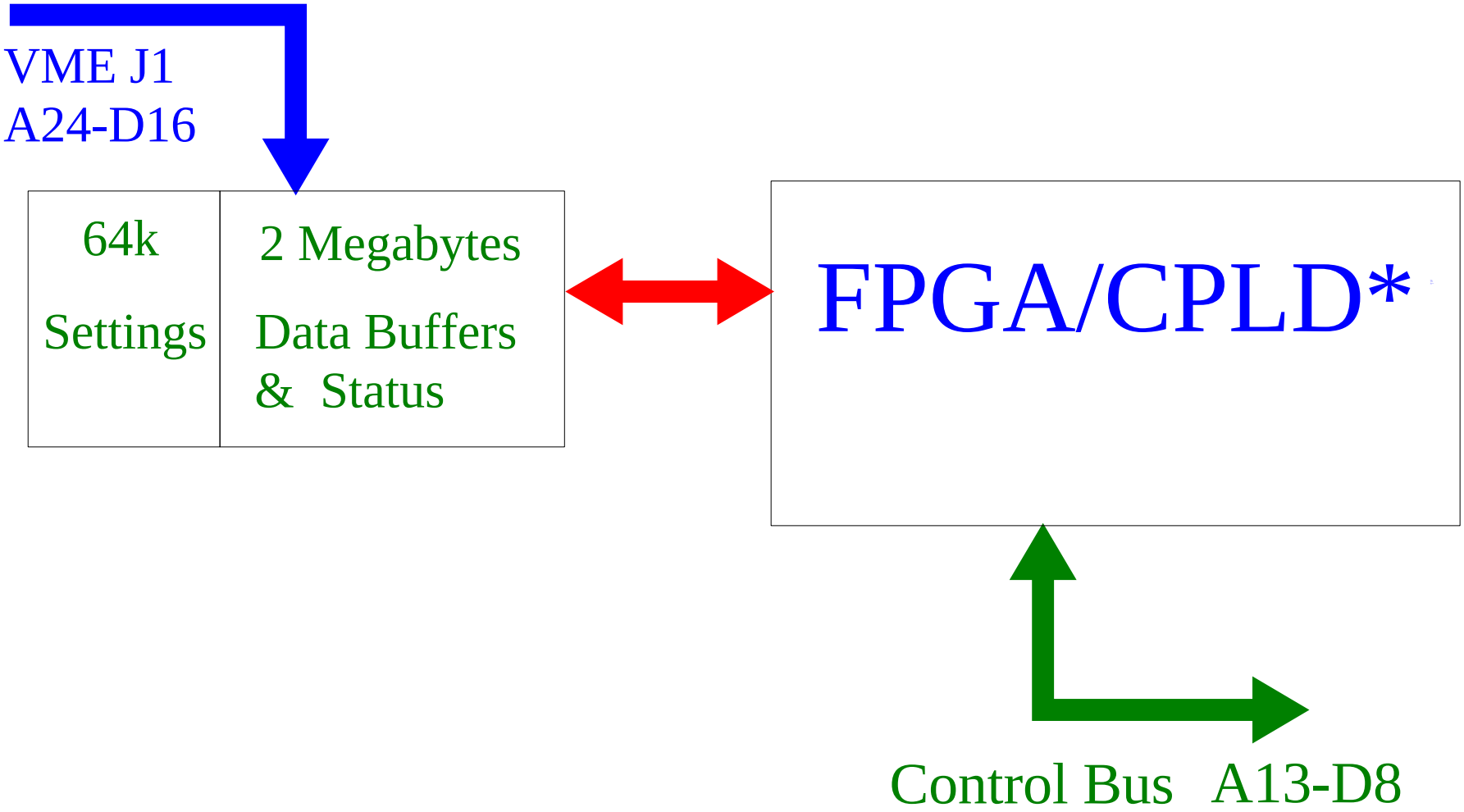

Revised 4/22/04

BLM Clk and Timing CNTL Card

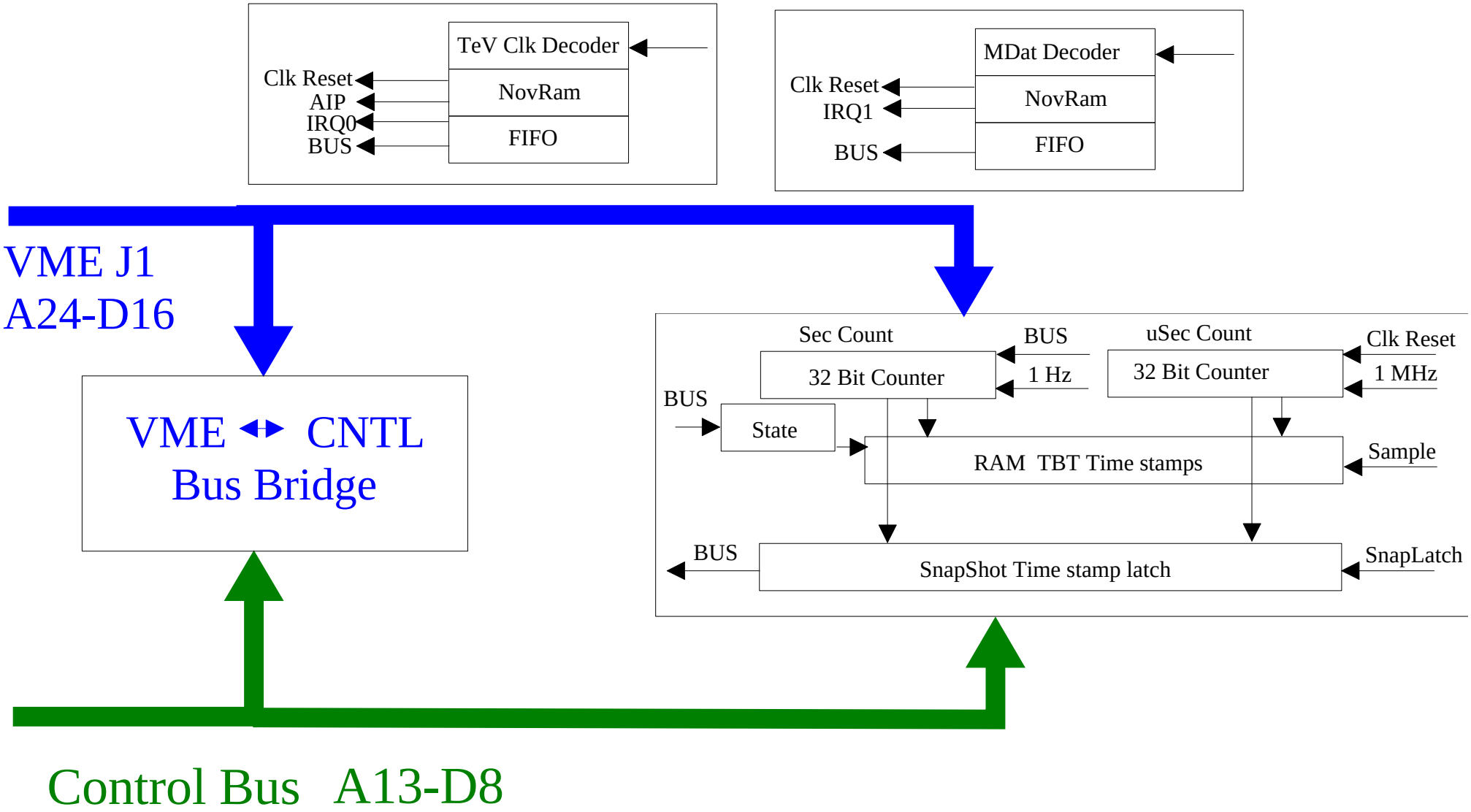

Revised 4/22/0

BLM Abort CNTL Card

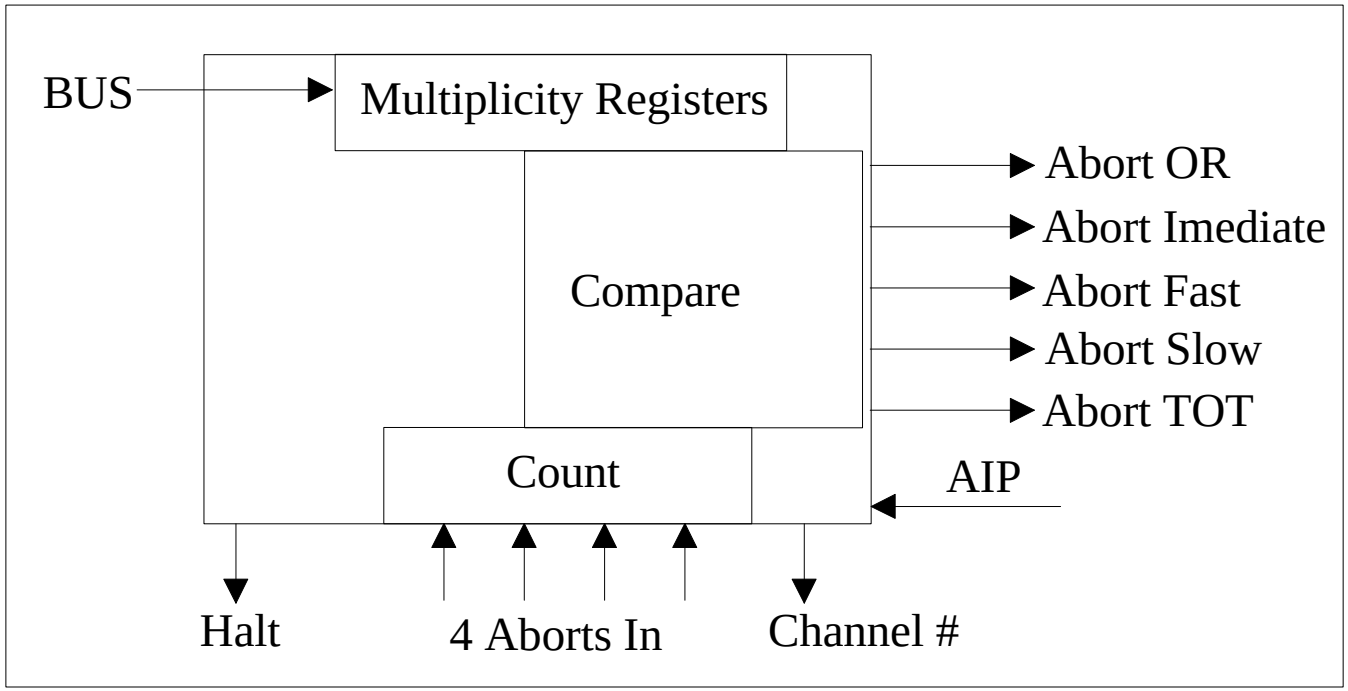

Control Bus A13-D8

Revised 4/22/04

BLM HV/MADC Card

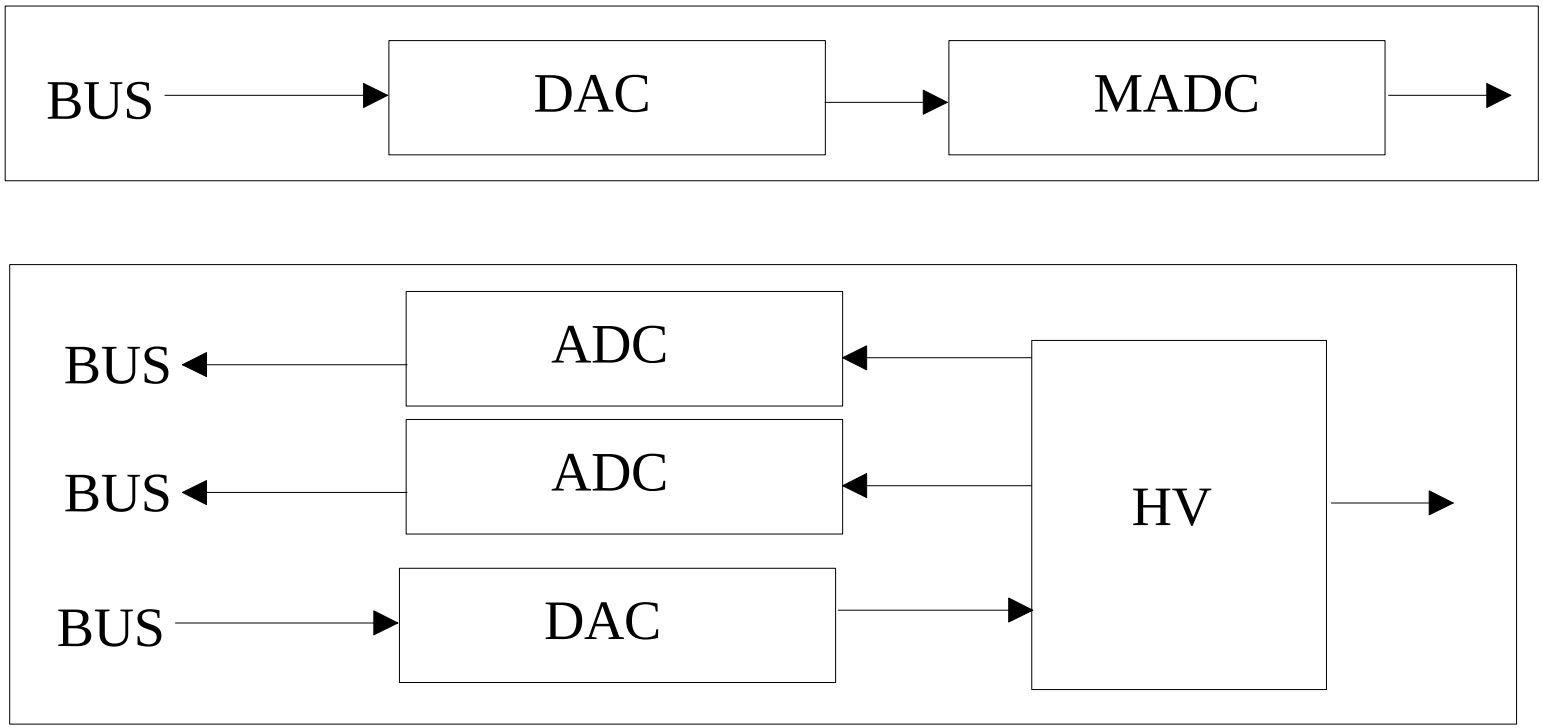

Control Bus A13-D8

Revised 4/21/04

Tevatron BLM VME Memory Allocation

Digitizer Card Addressing (Up to 16)
5 Bits Card Address
2 Bit Channel select
17 Bits Ram Address
.5MB address space/card

Time Card (1)
4 Bits Card Address
1 Bit Timing/Bridge Select(Non-FPGA/CPLD)
2 Bit Time Channel select
17 Bits Ram Address
1 MB address space

VME to FPGA/CPLD 2MB (0-1)
3 Bits Card Address
21 Bits Ram Address
2 MB address space

Abort Con Card 0MB (0-1)
0 MB address space
HV/MADC Card 0MB (0-1)
0 MB address space

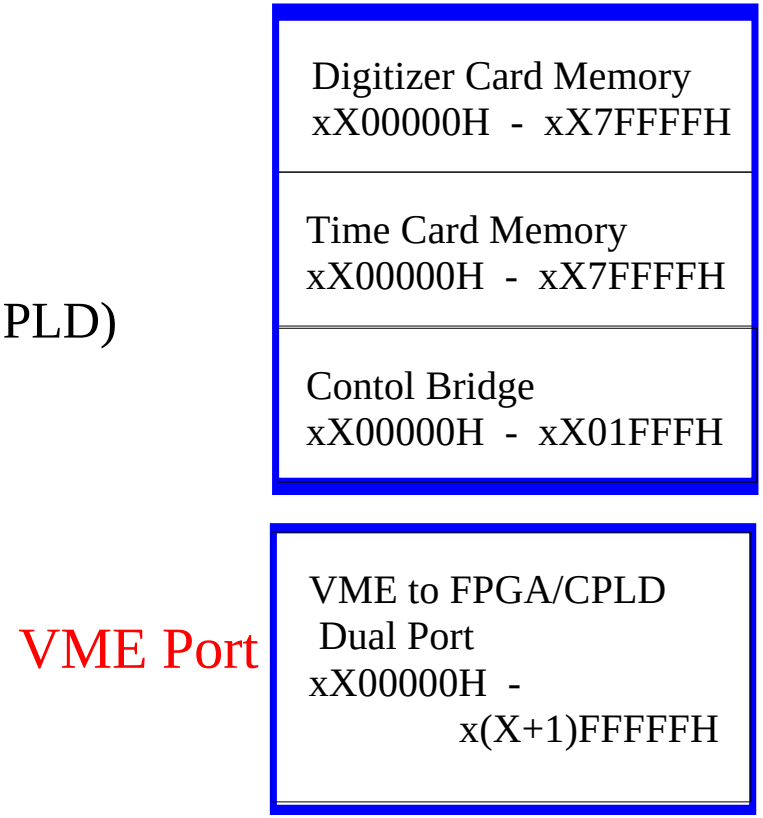

Revised 4/21/04

Tevatron Abortable BLM Digitizer Card Memory Map

VME Access

A23-A19 = Switch Setting
Then:
A2,A1 = CHANNEL 0/1/2/3
A18-A3 = 128Kb of TBT Data (64k Turns) Readable only when Stopped

Controller Access

A12-A8 = Switch Setting
Then:
A7-A0 = 256 internal FPGA registers

Revised 4/22/04

256 State Settings Buffer	64k
512 Monitor Buffer (Temp,V etc)	1k
512 Control Buffer (MADC,HV etc)	1k
16 Pointers Buffer	1k
256 Display Buffer	20k
256 Profile Buffer	20k
256 Flash Buffer	20k
8K Slow Snapshot Memory	640k
8K Snapshot Memory	640k

E-EDB LOW MEM
000000 - 007FFF

107800 - 10B3FF

107800 - 10B3FF

103C00 - 1077FF

E-EDB HIGH MEM
008000 - 00FFFF

High Mem Page size =8000

100000 - 103BFF

080000 - 0FFFFF

000000 - 07FFFF

Revised 4/22/04

Tevatron BLM VME Memory Allocation Example

Switch Settings			Address Range	
000	Controller Card	2 MB	00000000-1FFFFFFF	VME to FPGA/CPLD Dual Port xX00000H - x(X+1)FFFFFH
0010	Timing/Bridge Card	1 MB	20000000-2FFFFFFF	Time Card Memory xX00000H - xXFFFFFH
00110	Digitizer Card(0)	.5 MB	30000000-37FFFFFF	Digitizer Card Memory xX00000H - xX7FFFFH
00111	Digitizer Card(1)	.5 MB	38000000-3FFFFFFF	Digitizer Card Memory xX00000H - xX7FFFFH
01000	Digitizer Card(2)	.5 MB	40000000-47FFFFFF	Digitizer Card Memory xX00000H - xX7FFFFH
01001	Digitizer Card(3)	.5 MB	48000000-4FFFFFFF	Digitizer Card Memory xX00000H - xX7FFFFH

Non-Tevatron BLM System

Revised 4/22/04

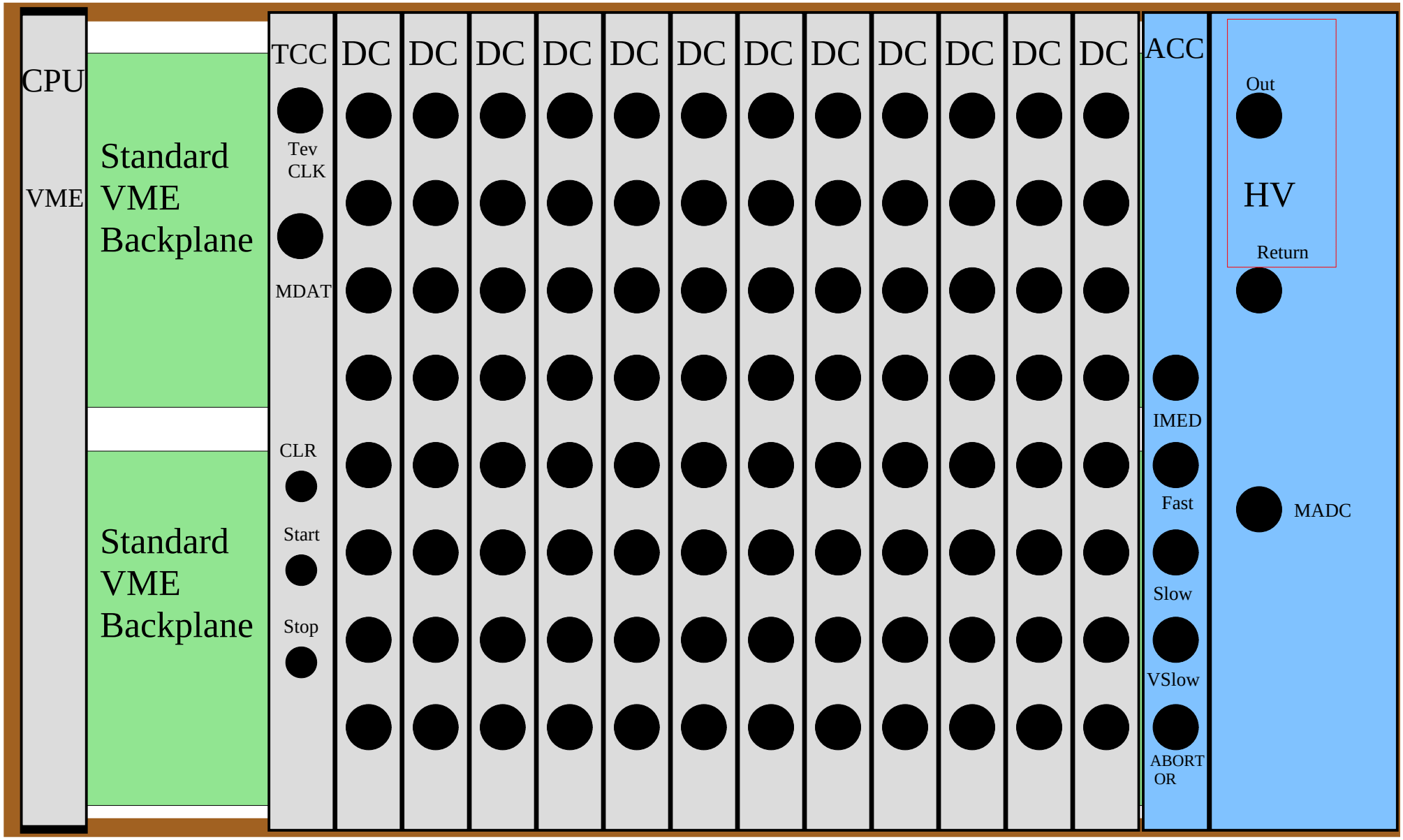

Optional

Revised 4/22/04

BLM VME Memory Allocation Example (Non-Tev)

Switch Settings			Address Range	
0000	Timing/Bridge Card	1 MB	00000000-0FFFFFFF	Time Card Memory xX00000H - xXFFFFFH
00010	Digitizer Card(0)	.5 MB	10000000-17FFFFFF	Digitizer Card Memory xX00000H - xX7FFFFH
00011	Digitizer Card(1)	.5 MB	18000000-1FFFFFFF	Digitizer Card Memory xX00000H - xX7FFFFH
	●			●
	●			●
	●			●
	●			●
10011	Digitizer Card(17)	.5 MB	98000000-9FFFFFFF	Digitizer Card Memory xX00000H - xX7FFFFH
10100	Digitizer Card(18)	.5 MB	A0000000-AFFFFFFF	Digitizer Card Memory xX00000H - xX7FFFFH