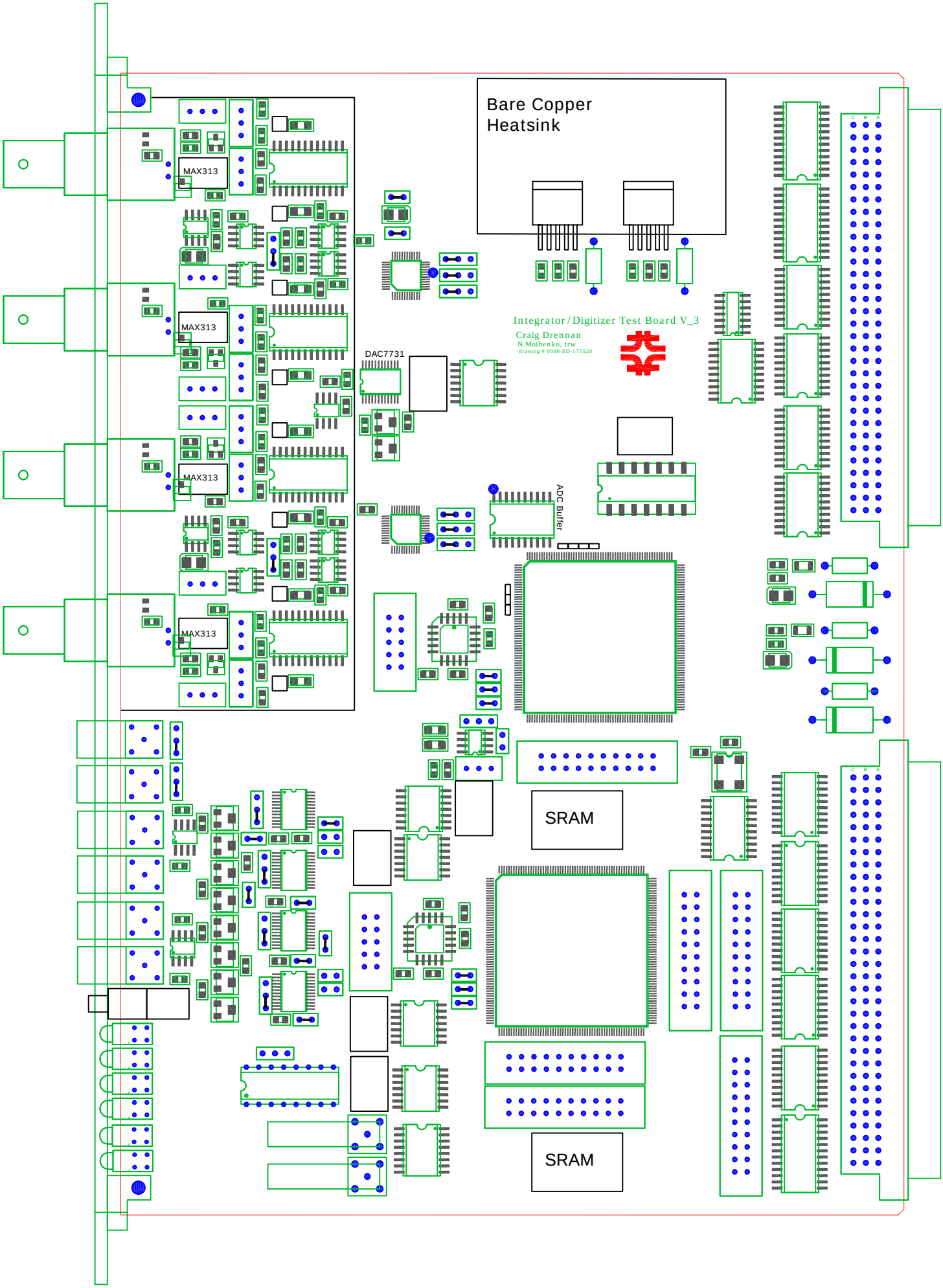
Bare Copper
Heatsink
MAX313
MAX313
MAX313
MAX313
DAC7731
Integrator/Digitizer Test Board V_3
Craig Drennan
N.Moibenko, trw
drawing # 0000-ED-173520
ADC Buffer
SRAM
SRAM

Signal #1 (TOP)

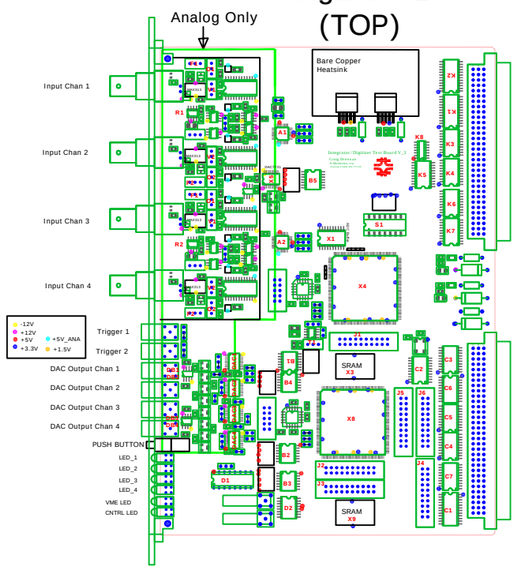

Ground #2

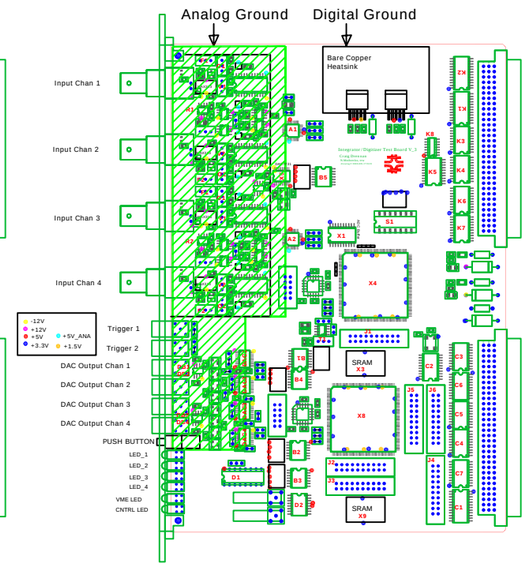

Signal #3

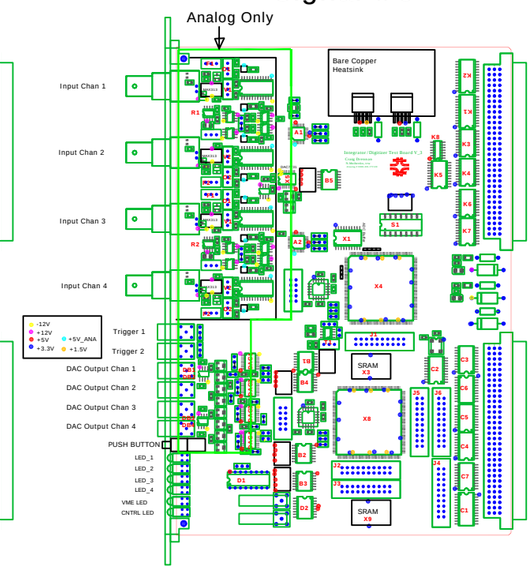

Power #4

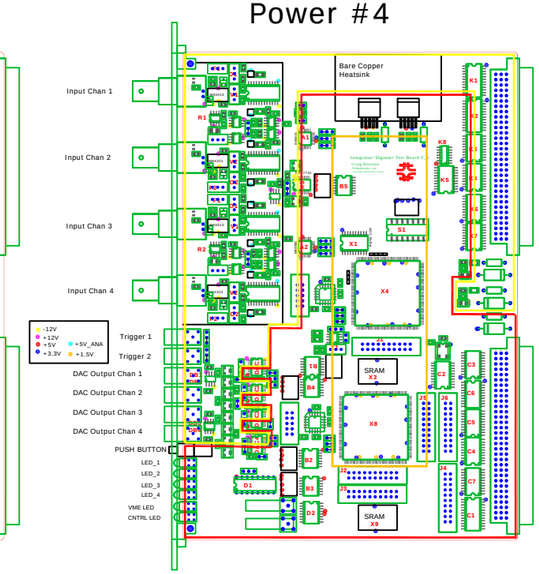

Power #5

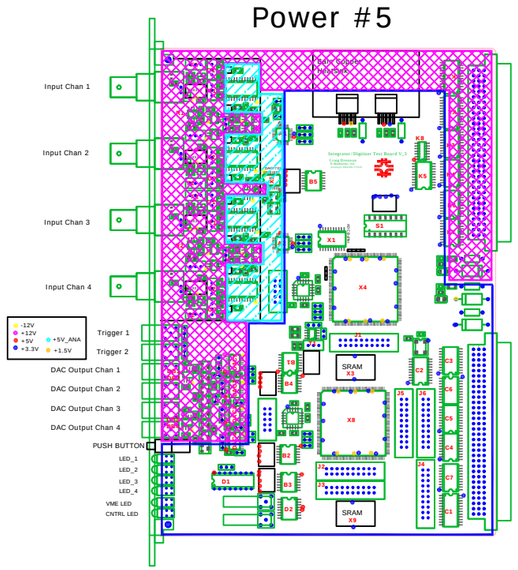

AGND / Digital Signal #6

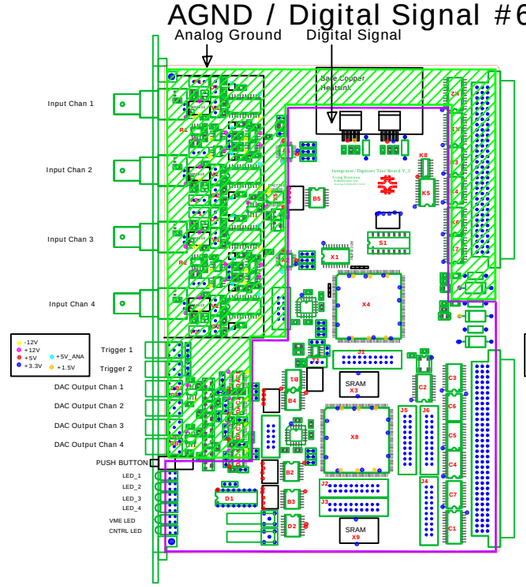

Digital Ground #7

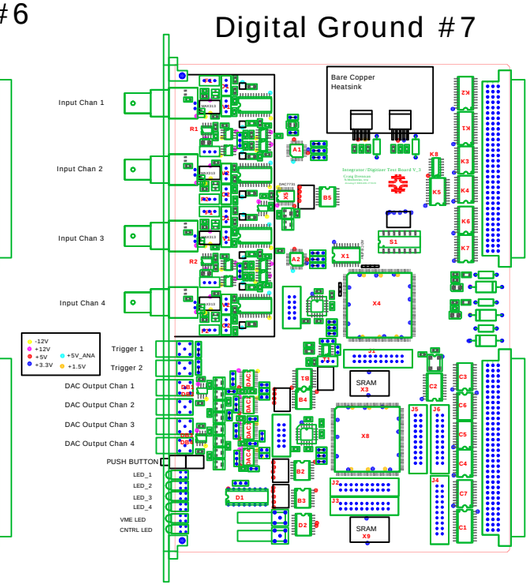

Digital Signal #8

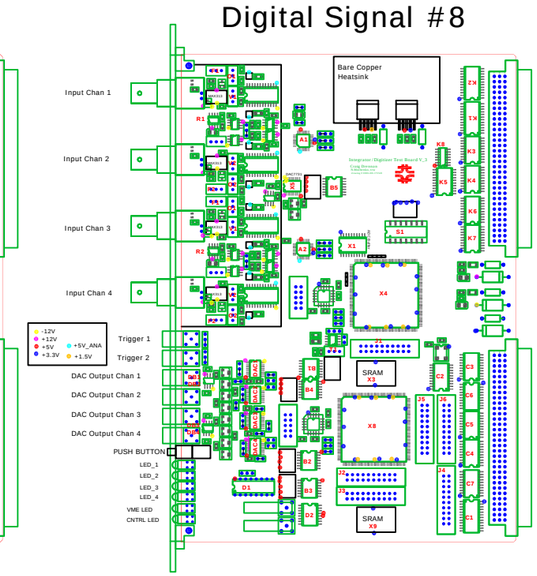

Observations:

1. The "Analog Area" is that area outlined as Analog Only on Layers #1 and #3.

2. There are only 2 signal layers on which to route the analog signals in the area of the integrators and the DAC outputs.

3. There are 4 layers on which to route the digital signals.

4. There is only 1 [!] layer on which to route the digital signals in the analog areas around the integrators and DAC outputs. If a via to another layer is necessary the signal may cut into the Analog Ground area of Layer #6. Also any crossing of digital traces into the analog area must be made on the Bottom Layer.

5. Digital signals to the DACs should be routed on Layers #1 and #8 only.