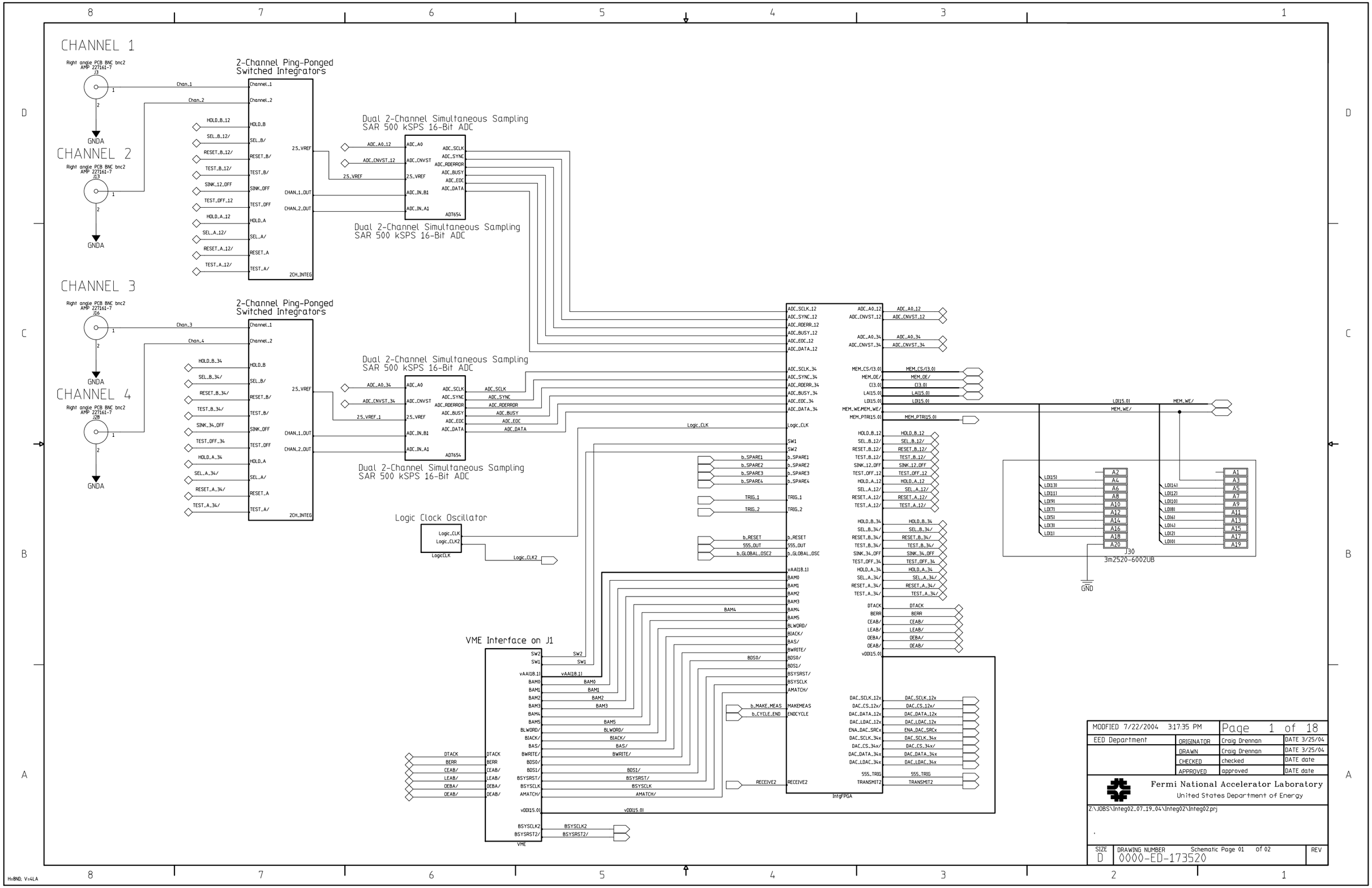
CHANNEL 1
Right angle PCB BNC bnc2
AMP 227161-7
J3
GNDA
CHANNEL 2
Right angle PCB BNC bnc2
AMP 227161-7
J13
GNDA
2-Channel Ping-Ponged
Switched Integrators
Channel_1
Channel_2
HOLD_B
SEL_B/
RESET_B/
TEST_B/
SINK_OFF
TEST_OFF
HOLD_A
SEL_A/
RESET_A
TEST_A/
2CH_INTEG
2.5_VREF
CHAN_1_OUT
CHAN_2_OUT
Dual 2-Channel Simultaneous Sampling
SAR 500 kSPS 16-Bit ADC
ADC_A0
ADC_CNVST
ADC_IN_B1
ADC_IN_A1
ADC_SCLK
ADC_SYNC
ADC_RDERROR
ADC_BUSY
ADC_EOC
ADC_DATA
AD7654
CHANNEL 3
Right angle PCB BNC bnc2
AMP 227161-7
J16
GNDA
CHANNEL 4
Right angle PCB BNC bnc2
AMP 227161-7
J28
GNDA
2.5_VREF_1
Logic Clock Oscillator
Logic_CLK
Logic_CLK2
LogicCLK
VME Interface on J1
DTACK
BERR
CEAB/
LEAB/
OEBA/
OEAB/
vAA[18.1]
BAM0
BAM1
BAM2
BAM3
BAM4
BAM5
BLWORD/
BIACK/
BAS/
BWRITE/
BDS0/
BDS1/
BSYSRST/
BSYSCLK
AMATCH/
vDD[15.0]
BSYSCLK2
BSYSRST2/
VME
IntgFPGA
b_SPARE1
b_SPARE2
b_SPARE3
b_SPARE4
TRIG_1
TRIG_2
b_RESET
SSS_OUT
b_GLOBAL_OSC2
MAKEMEAS
ENDCYCLE
RECEIVE2
MEM_CS/[3.0]
MEM_OE/
[3.0]
LA[15.0]
LD[15.0]
MEM_WE/MEM_WE/
MEM_PTR[15.0]
DAC_SCLK_12x
DAC_CS_12x/
DAC_DATA_12x
DAC_LDAC_12x
ENA_DAC_SRCx
DAC_SCLK_34x
DAC_CS_34x/
DAC_DATA_34x
DAC_LDAC_34x
SSS_TRIG
TRANSMIT2
J30
3m2520-6002UB
GND
MODIFIED 7/22/2004 3:17:35 PM
Page 1 of 18
EED Department
ORIGINATOR Craig Drennan DATE 3/25/04
DRAWN Craig Drennan DATE 3/25/04
CHECKED checked DATE date
APPROVED approved DATE date
Fermi National Accelerator Laboratory
United States Department of Energy
Z:\JOBS\Integ02_07_19_04\Integ02\Integ02.prj
SIZE D
DRAWING NUMBER 0000-ED-173520
Schematic Page 01 of 02
REV
H=8ND; V=4LA

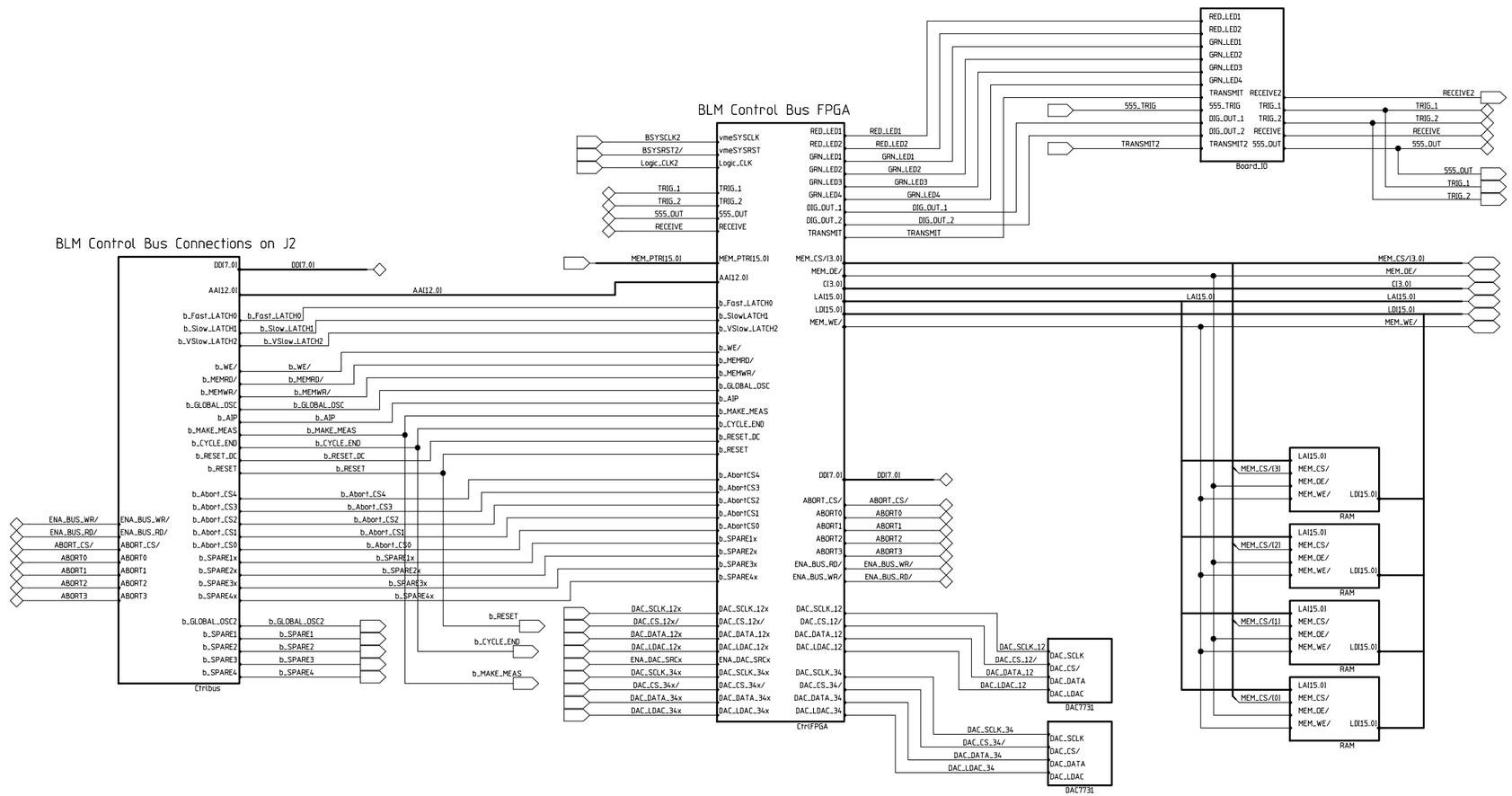


| | | | |
|---|---|---|---|
| MODIFIED 7/22/2004 3:17:35 PM | | Page 2 of 18 | |
| EED Department | ORIGINATOR | Craig Drennan | DATE 3/25/04 |
| | DRAWN | Craig Drennan | DATE 3/25/04 |
| | CHECKED | checked | DATE date |
| | APPROVED | approved | DATE date |

Fermi National Accelerator Laboratory
United States Department of Energy

Z:\JOBS\Integ02_07_19_04\Integ02\Integ02.prj

| SIZE | DRAWING NUMBER | REV |
|---|---|---|
| D | 0000-ED-173520 Schematic Page 02 of 02 | |

H=8ND; V=4LA

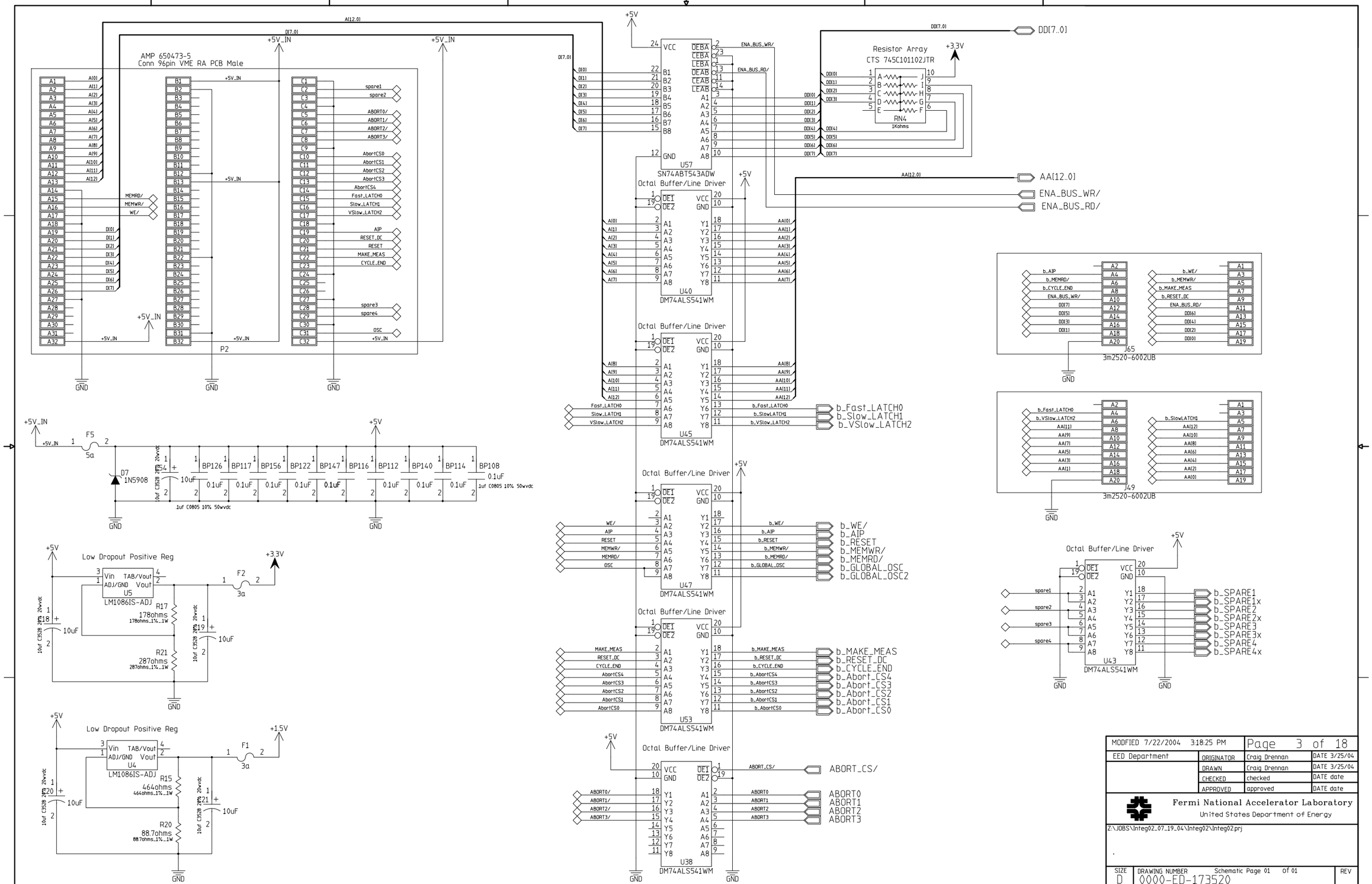


| MODIFIED 7/22/2004 3:18:25 PM | | Page 3 of 18 | |
|---|---|---|---|
| EED Department | ORIGINATOR | Craig Drennan | DATE 3/25/04 |
| | DRAWN | Craig Drennan | DATE 3/25/04 |
| | CHECKED | checked | DATE date |
| | APPROVED | approved | DATE date |

Fermi National Accelerator Laboratory
United States Department of Energy

Z:\JOBS\Integ02_07_19_04\Integ02\Integ02.prj

| SIZE | DRAWING NUMBER | | REV |
|---|---|---|---|
| D | 0000-ED-173520 | Schematic Page 01 of 01 | |

H=8ND; V=4LA

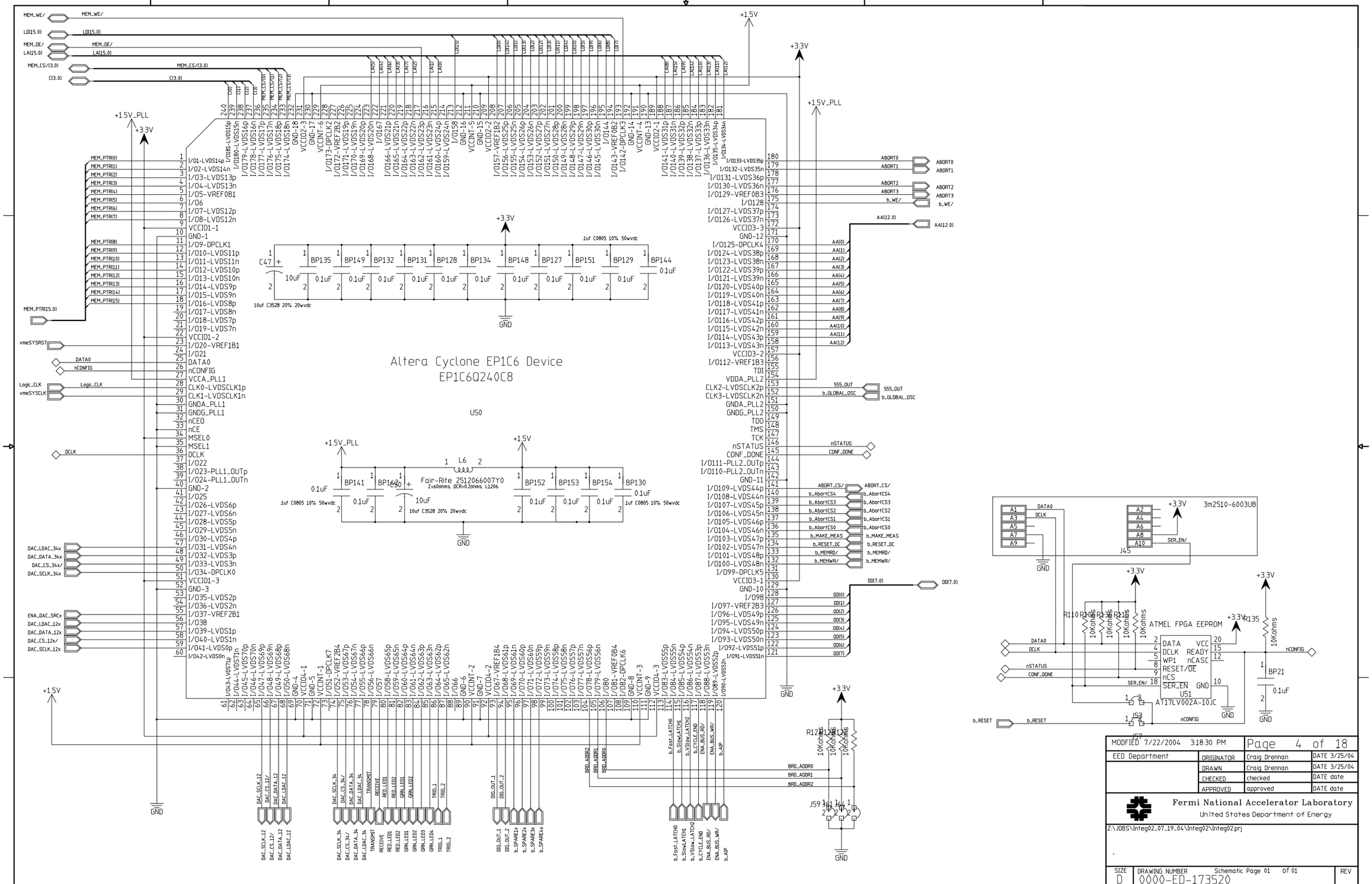


| MODIFIED 7/22/2004 3:18:30 PM | | Page 4 of 18 | |
|---|---|---|---|
| EED Department | ORIGINATOR | Craig Drennan | DATE 3/25/04 |
| | DRAWN | Craig Drennan | DATE 3/25/04 |
| | CHECKED | checked | DATE date |
| | APPROVED | approved | DATE date |

Fermi National Accelerator Laboratory
United States Department of Energy

Z:\JOBS\Integ02_07_19_04\Integ02\Integ02.prj

| SIZE | DRAWING NUMBER | REV |
|---|---|---|
| D | 0000-ED-173520 (Schematic Page 01 of 01) | |

H=8ND; V=4LA

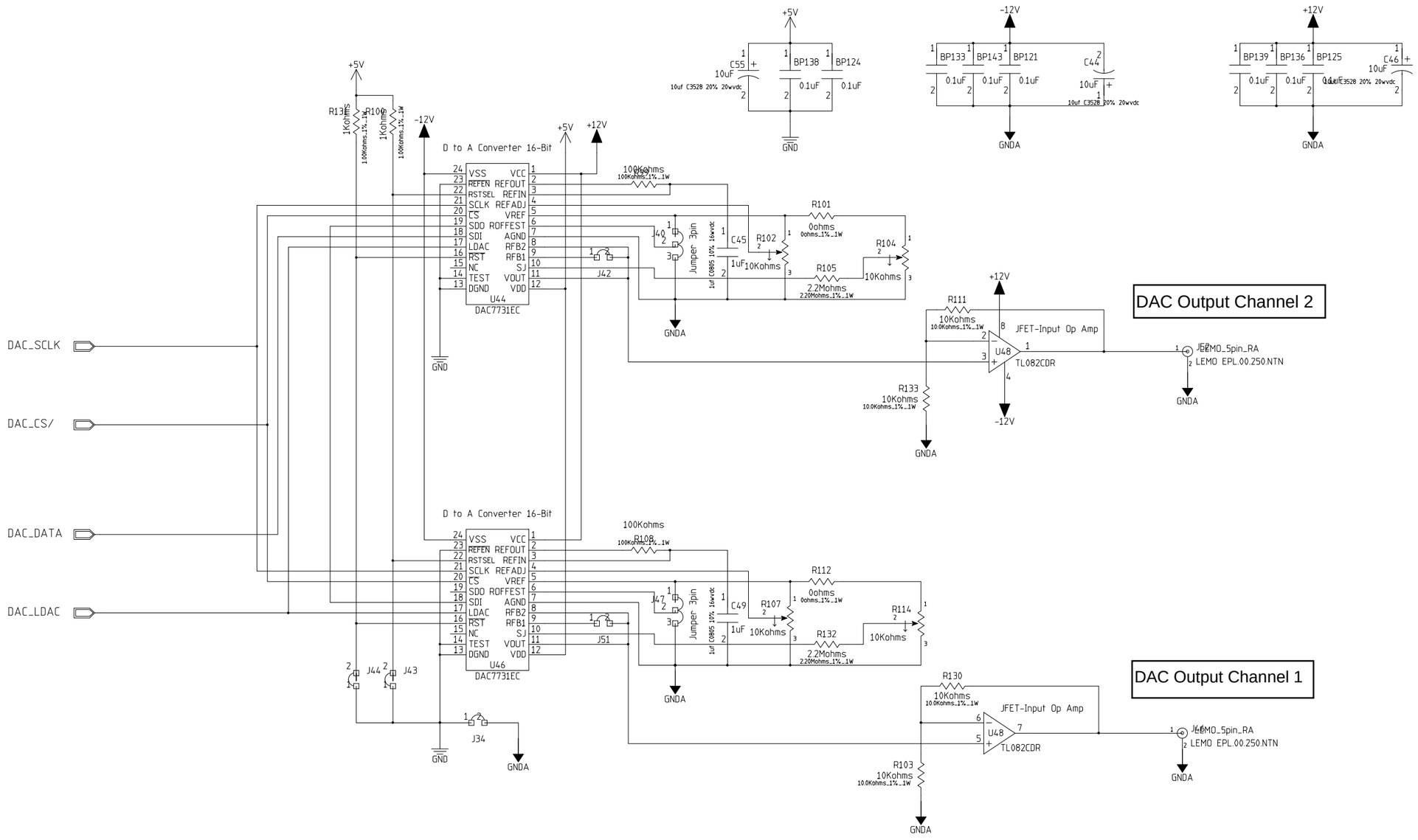


| | | | |
|---|---|---|---|
| MODFIED 6/21/2004 3:34:16 PM | Page 5 of 18 | | |
| EED Department | ORIGINATOR | Craig Drennan | DATE 3/25/04 |
| | DRAWN | Craig Drennan | DATE 3/25/04 |
| | CHECKED | checked | DATE date |
| | APPROVED | approved | DATE date |

Fermi National Accelerator Laboratory
United States Department of Energy

Z:\JOBS\Integ02_07_19_04\Integ02\Integ02.prj

| SIZE | DRAWING NUMBER | REV |
|---|---|---|
| D | 0000-ED-173520 (Schematic Page 01 of 01) | |

H=8ND; V=4LA

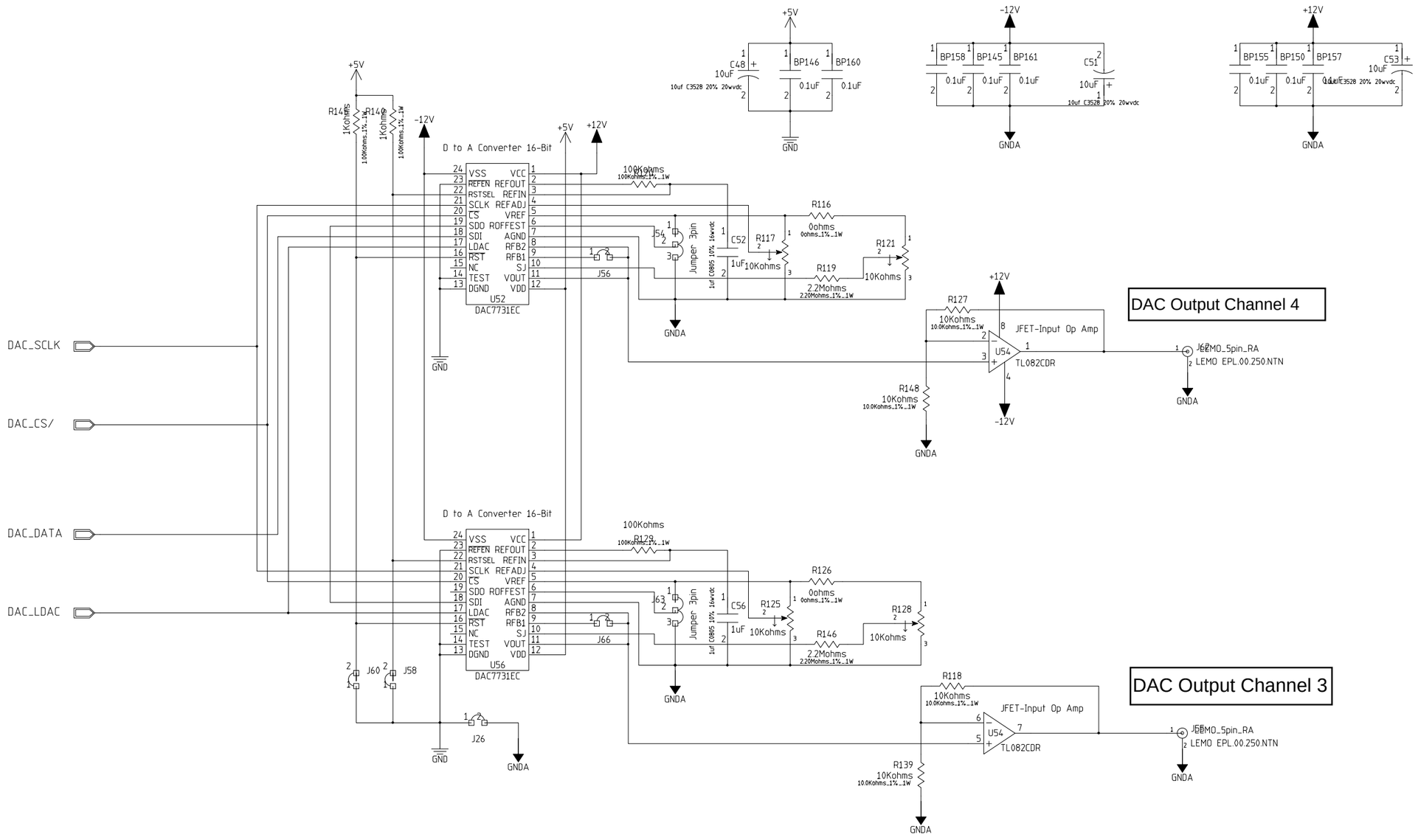


| | | | |
|---|---|---|---|
| MODFIED 6/21/2004 3:34:16 PM | Page 6 of 18 | | |
| EED Department | ORIGINATOR | Craig Drennan | DATE 3/25/04 |
| | DRAWN | Craig Drennan | DATE 3/25/04 |
| | CHECKED | checked | DATE date |
| | APPROVED | approved | DATE date |

Fermi National Accelerator Laboratory
United States Department of Energy

Z:\JOBS\Integ02_07_19_04\Integ02\Integ02.prj

| SIZE | DRAWING NUMBER | REV |
|---|---|---|
| D | 0000-ED-173520 Schematic Page 01 of 01 | |

H=8ND; V=4LA

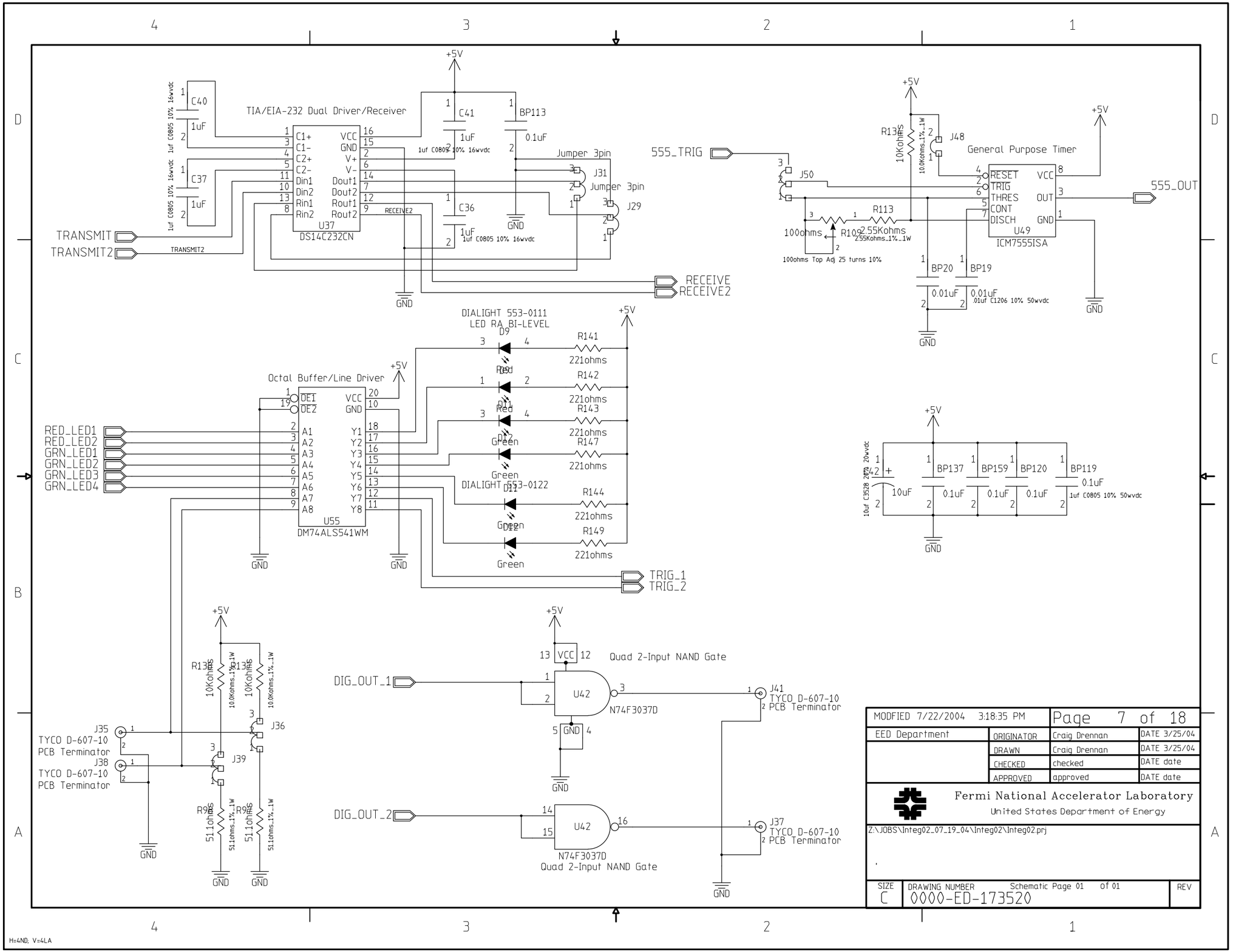


| | | | |
|---|---|---|---|
| MODFIED 7/22/2004 3:18:35 PM | | Page 7 of 18 | |
| EED Department | ORIGINATOR | Craig Drennan | DATE 3/25/04 |
| | DRAWN | Craig Drennan | DATE 3/25/04 |
| | CHECKED | checked | DATE date |
| | APPROVED | approved | DATE date |

Fermi National Accelerator Laboratory
United States Department of Energy

Z:\JOBS\Integ02_07_19_04\Integ02\Integ02.prj

| SIZE | DRAWING NUMBER | Schematic Page 01 of 01 | REV |
|---|---|---|---|
| C | 0000-ED-173520 | | |

H=4ND; V=4LA

# SRAM Channel 4

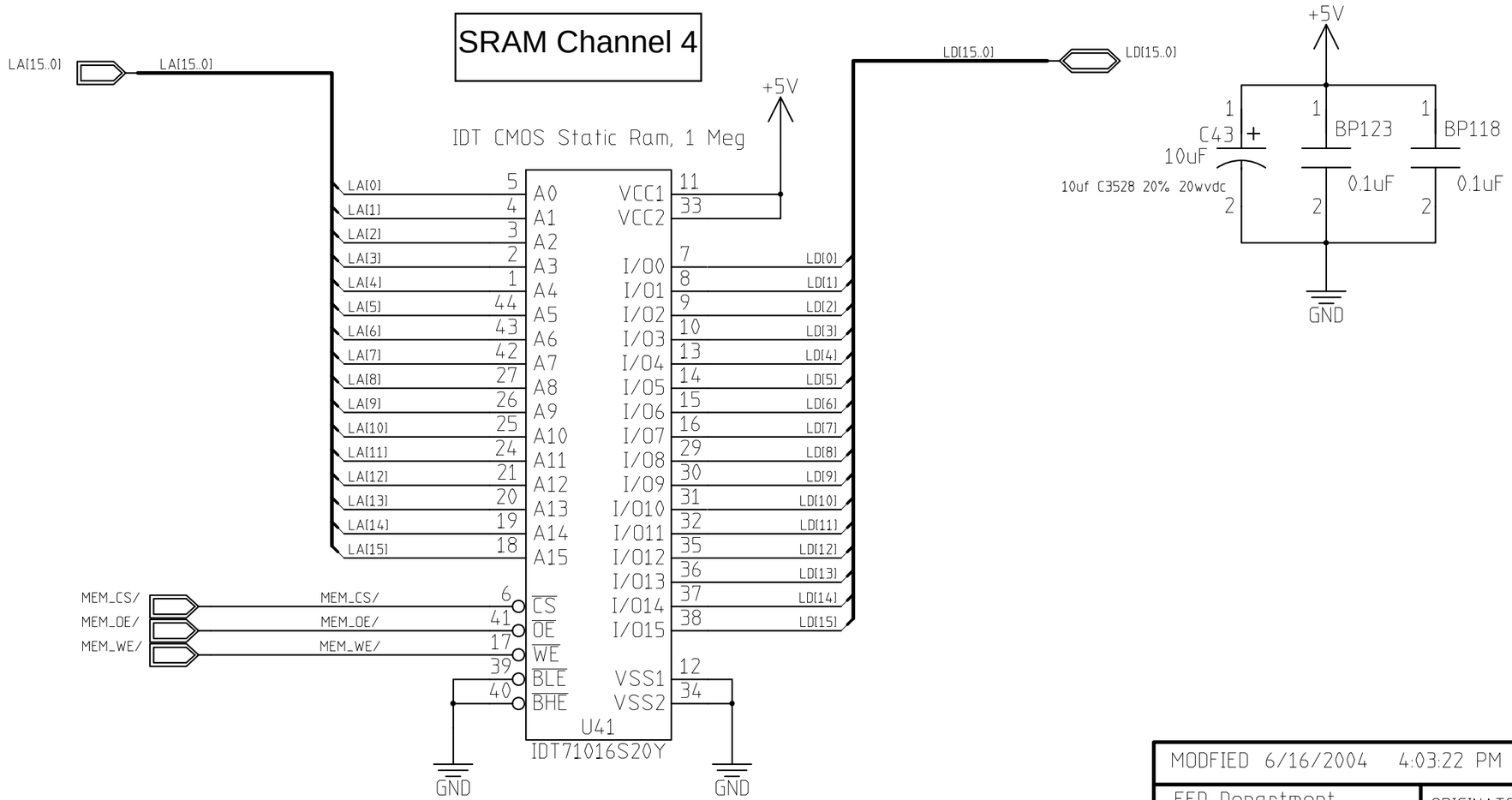


| | | | |
|---|---|---|---|
| MODFIED 6/16/2004 4:03:22 PM | | Page 8 of 18 | |
| EED Department | ORIGINATOR | Craig Drennan | DATE 3/25/04 |
| | DRAWN | Craig Drennan | DATE 3/25/04 |
| | CHECKED | checked | DATE date |
| | APPROVED | approved | DATE date |

Fermi National Accelerator Laboratory
United States Department of Energy

Z:\JOBS\Integ02_07_19_04\Integ02\Integ02.prj

| SIZE | DRAWING NUMBER | REV |
|---|---|---|
| B | 0000-ED-173520 Schematic Page 01 of 01 | |

H=2LA; V=2LA

# SRAM Channel 1

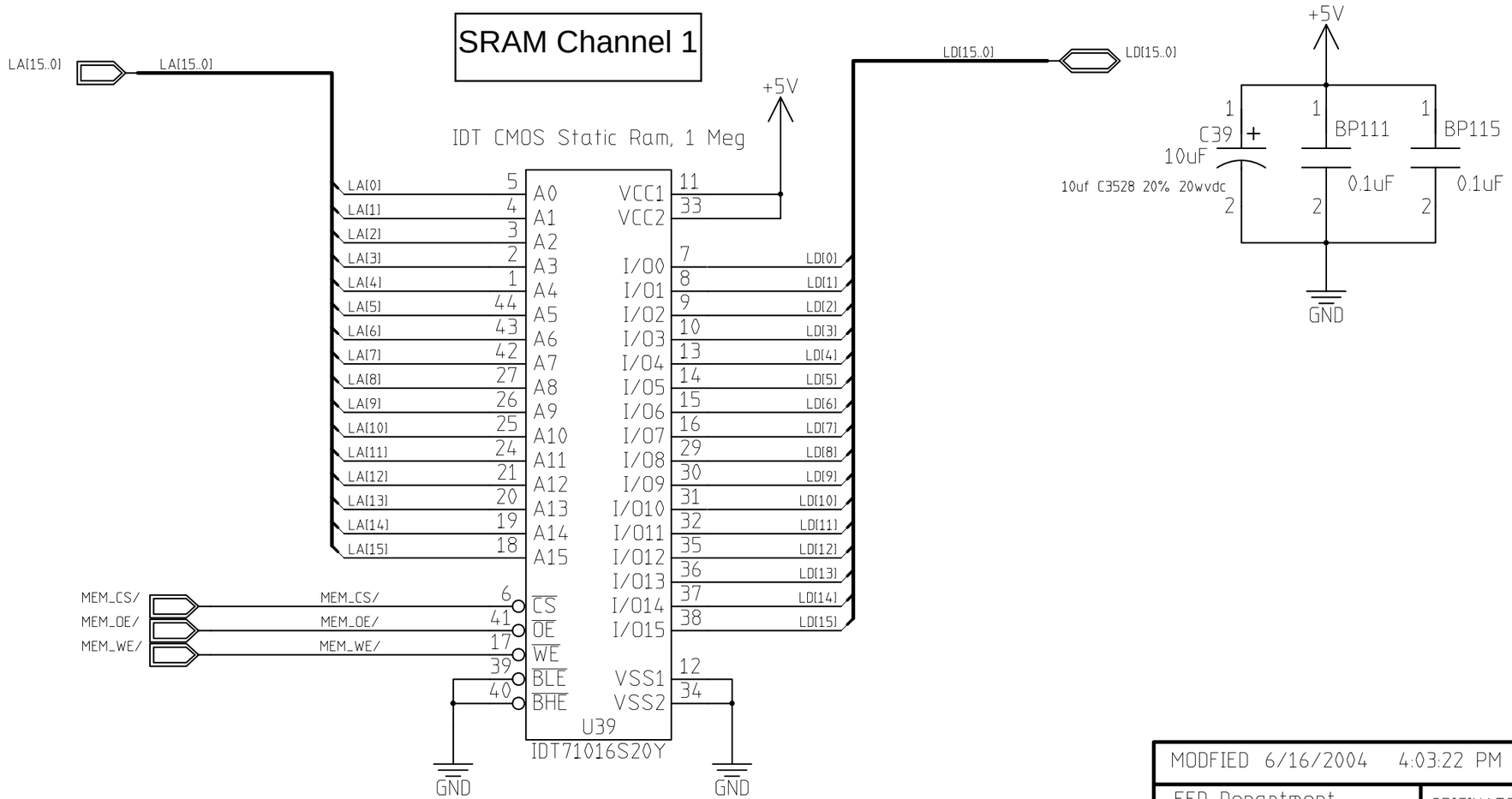


| | | | |
|---|---|---|---|
| MODFIED 6/16/2004 4:03:22 PM | | Page 9 of 18 | |
| EED Department | ORIGINATOR | Craig Drennan | DATE 3/25/04 |
| | DRAWN | Craig Drennan | DATE 3/25/04 |
| | CHECKED | checked | DATE date |
| | APPROVED | approved | DATE date |

Fermi National Accelerator Laboratory
United States Department of Energy

Z:\JOBS\Integ02_07_19_04\Integ02\Integ02.prj

| SIZE | DRAWING NUMBER | REV |
|---|---|---|
| B | 0000-ED-173520 Schematic Page 01 of 01 | |

H=2LA; V=2LA

# SRAM Channel 2

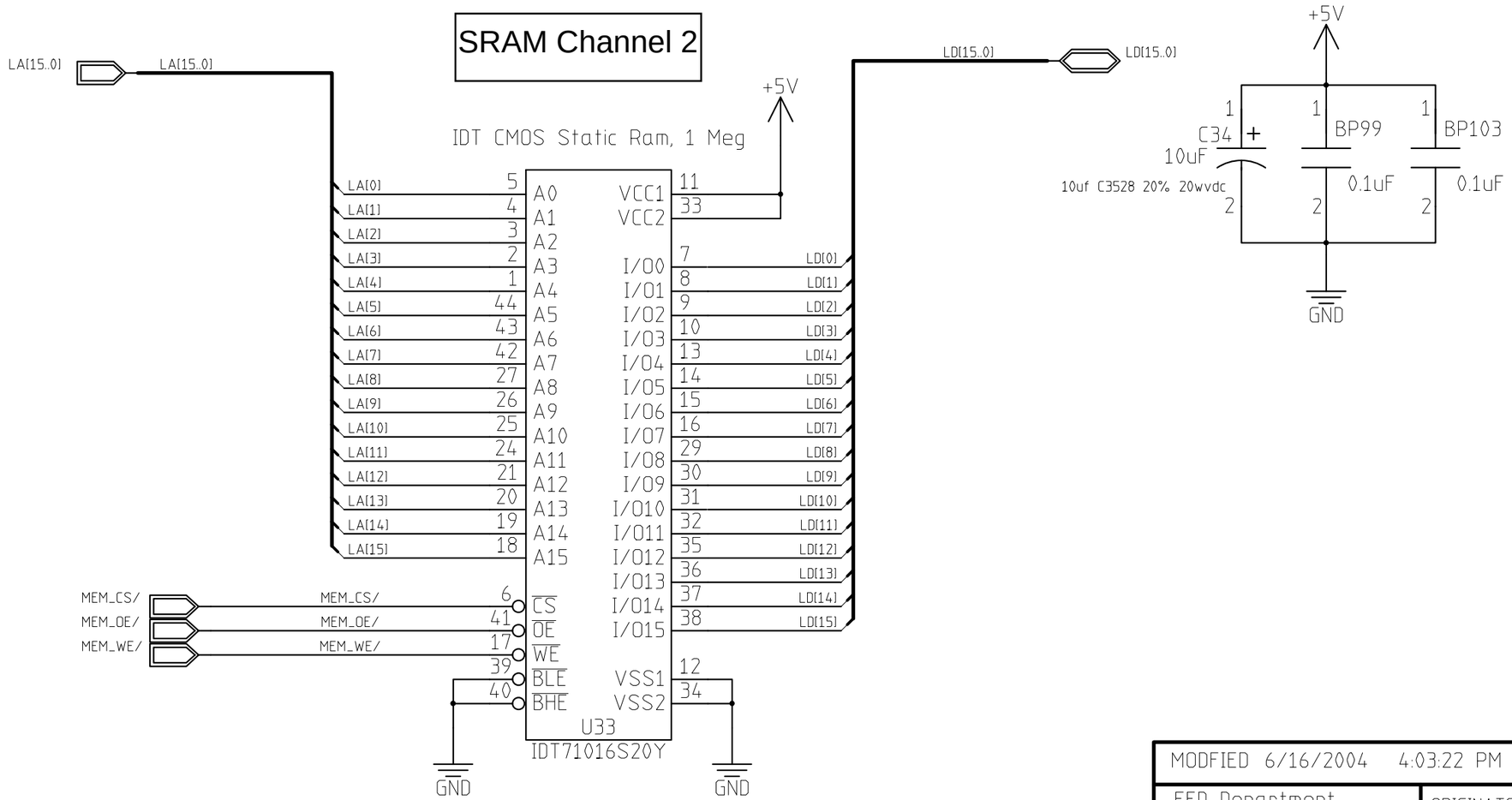


| | | | |
|---|---|---|---|
| MODFIED 6/16/2004 4:03:22 PM | | Page 10 of 18 | |
| EED Department | ORIGINATOR | Craig Drennan | DATE 3/25/04 |
| | DRAWN | Craig Drennan | DATE 3/25/04 |
| | CHECKED | checked | DATE date |
| | APPROVED | approved | DATE date |

Fermi National Accelerator Laboratory
United States Department of Energy

Z:\JOBS\Integ02_07_19_04\Integ02\Integ02.prj

| SIZE | DRAWING NUMBER | REV |
|---|---|---|
| B | 0000-ED-173520 Schematic Page 01 of 01 | |

H=2LA; V=2LA

# SRAM Channel 3

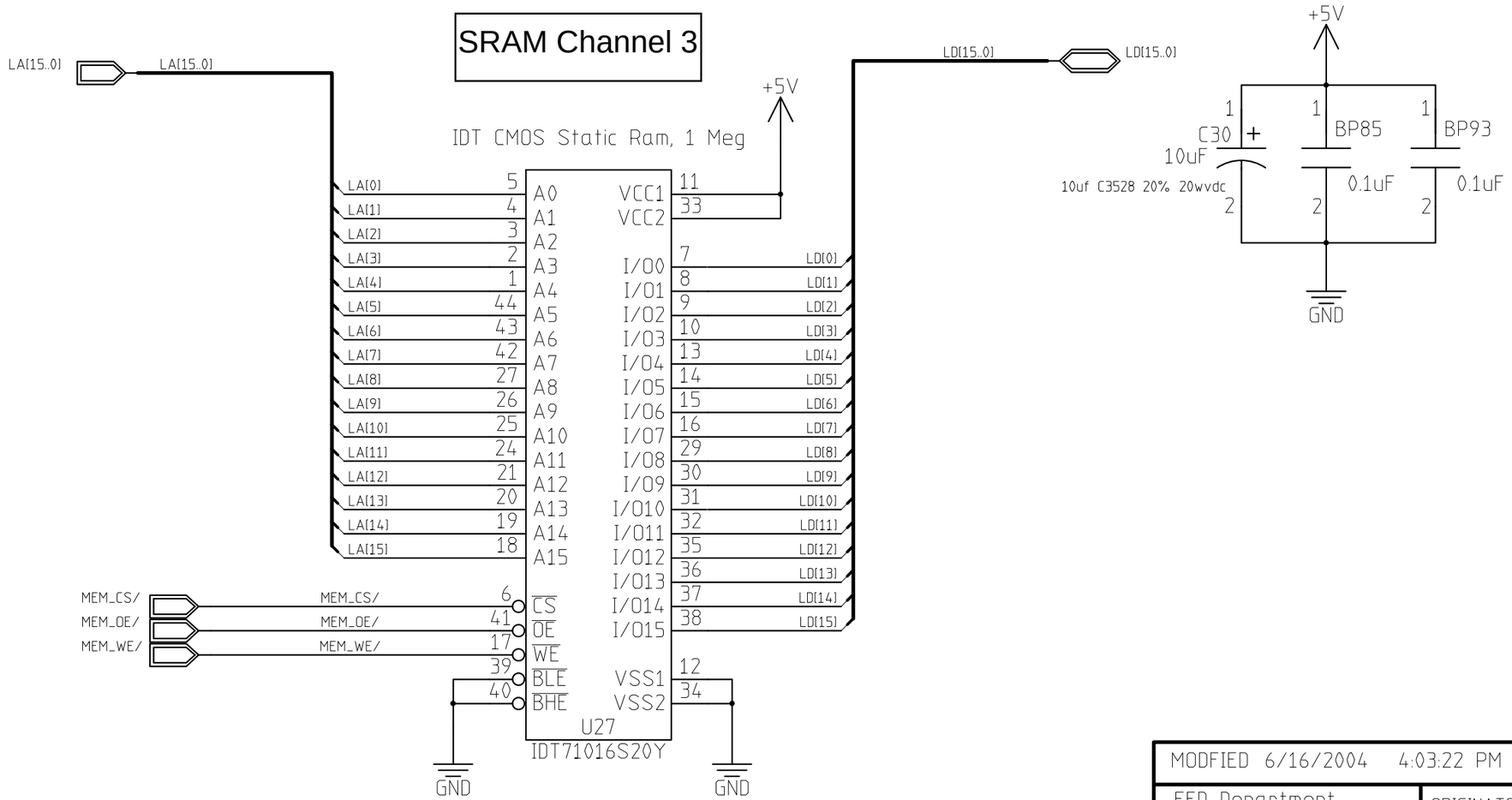


| | | | |
|---|---|---|---|
| MODFIED 6/16/2004 4:03:22 PM | | Page 11 of 18 | |
| EED Department | ORIGINATOR | Craig Drennan | DATE 3/25/04 |
| | DRAWN | Craig Drennan | DATE 3/25/04 |
| | CHECKED | checked | DATE date |
| | APPROVED | approved | DATE date |

Fermi National Accelerator Laboratory
United States Department of Energy

Z:\JOBS\Integ02_07_19_04\Integ02\Integ02.prj

| SIZE | DRAWING NUMBER | REV |
|---|---|---|
| B | 0000-ED-173520 Schematic Page 01 of 01 | |

H=2LA; V=2LA

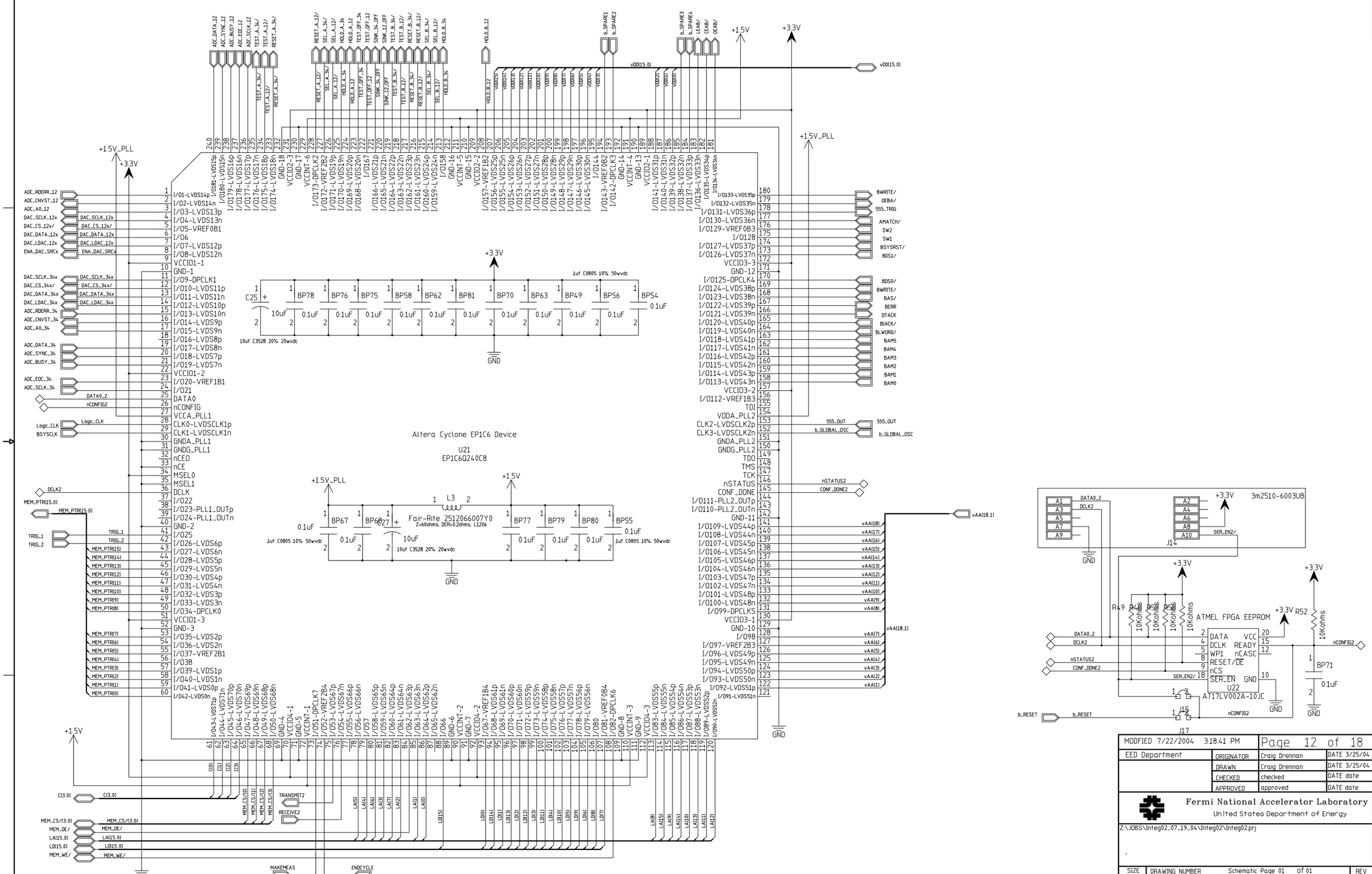
Altera Cyclone EP1C6 Device
U21
EP1C6Q240C8
Fair-Rite 2512066007Y0
2-60ohms, DCR=0.20ohms, L1206
ATMEL FPGA EEPROM
AT17LV002A-10JC
3m2510-6003UB
+1.5V_PLL
+3.3V
+1.5V
GND
MODIFIED 7/22/2004 3:18:41 PM
Page 12 of 18
EED Department
ORIGINATOR Craig Drennan DATE 3/25/04
DRAWN Craig Drennan DATE 3/25/04
CHECKED checked DATE date
APPROVED approved DATE date
Fermi National Accelerator Laboratory
United States Department of Energy
Z:\JOBS\Integ02_07_19_04\Integ02\Integ02.prj
SIZE D
DRAWING NUMBER 0000-ED-173520
Schematic Page 01 of 01
REV

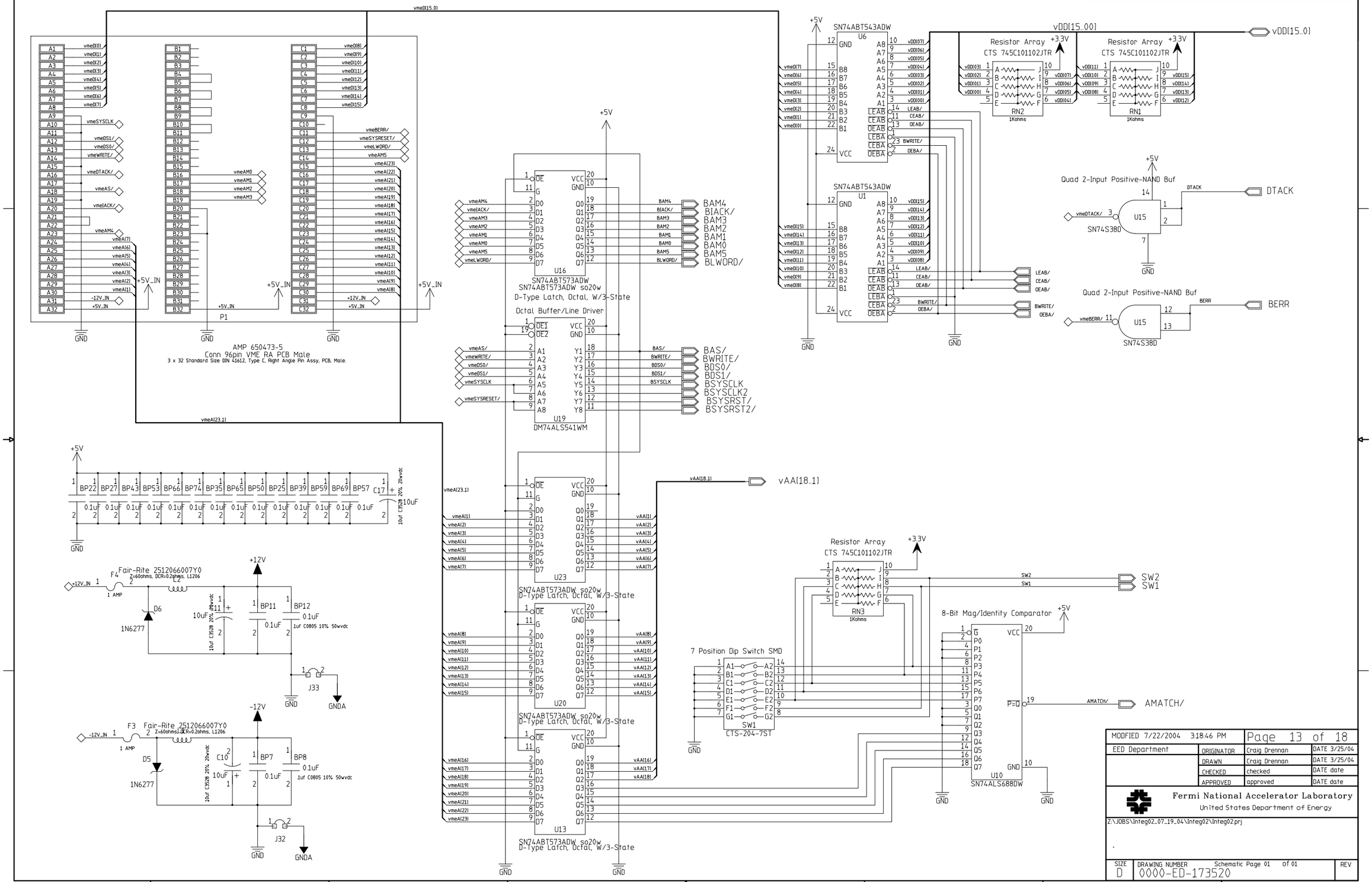

AMP 650473-5
Conn 96pin VME RA PCB Male
3 x 32 Standard Size DIN 41612, Type C, Right Angle Pin Assy, PCB, Male.
P1
SN74ABT543ADW
U6
U1
SN74ABT573ADW
SN74ABT573ADW so20w
D-Type Latch, Octal, W/3-State
U16
Octal Buffer/Line Driver
U19
DM74ALS541WM
U23
U20
U13
Resistor Array
CTS 745C101102JTR
RN2
RN1
1Kohms
vDD[15..00]
vDD[15..0]
Quad 2-Input Positive-NAND Buf
U15
SN74S38D
DTACK
BERR
BAM4
BIACK/
BAM3
BAM2
BAM1
BAM0
BAM5
BLWORD/
BAS/
BWRITE/
BDS0/
BDS1/
BSYSCLK
BSYSCLK2
BSYSRST/
BSYSRST2/
vAA[18..1]
Fair-Rite 2512066007Y0
F4
F3
1N6277
J33
J32
GNDA
7 Position Dip Switch SMD
SW1
CTS-204-7ST
RN3
8-Bit Mag/Identity Comparator
U10
SN74ALS688DW
SW2
SW1
AMATCH/
MODFIED 7/22/2004 3:18:46 PM
Page 13 of 18
EED Department
ORIGINATOR Craig Drennan DATE 3/25/04
DRAWN Craig Drennan DATE 3/25/04
CHECKED checked DATE date
APPROVED approved DATE date
Fermi National Accelerator Laboratory
United States Department of Energy
Z:\JOBS\Integ02_07_19_04\Integ02\Integ02.prj
SIZE D
DRAWING NUMBER 0000-ED-173520
Schematic Page 01 of 01
REV
H=8ND; V=4LA

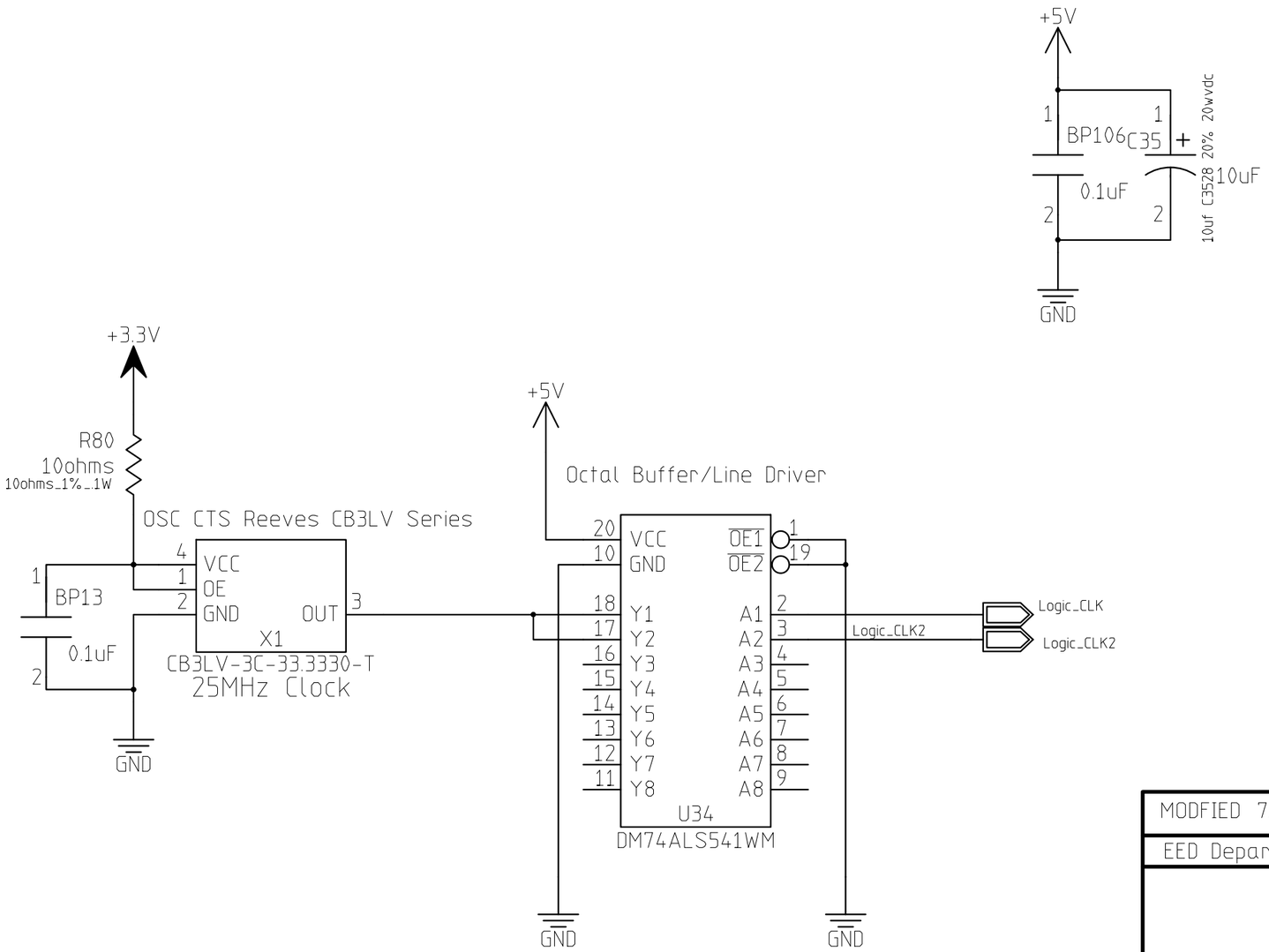


| | | | |
|---|---|---|---|
| MODFIED 7/22/2004 3:18:50 PM | | Page 14 of 18 | |
| EED Department | ORIGINATOR | Craig Drennan | DATE 3/25/04 |
| | DRAWN | Craig Drennan | DATE 3/25/04 |
| | CHECKED | checked | DATE date |
| | APPROVED | approved | DATE date |

Fermi National Accelerator Laboratory
United States Department of Energy

Z:\JOBS\Integ02_07_19_04\Integ02\Integ02.prj

| SIZE | DRAWING NUMBER | REV |
|---|---|---|
| B | 0000-ED-173520 Schematic Page 01 of 01 | |

H=2LA; V=2LA

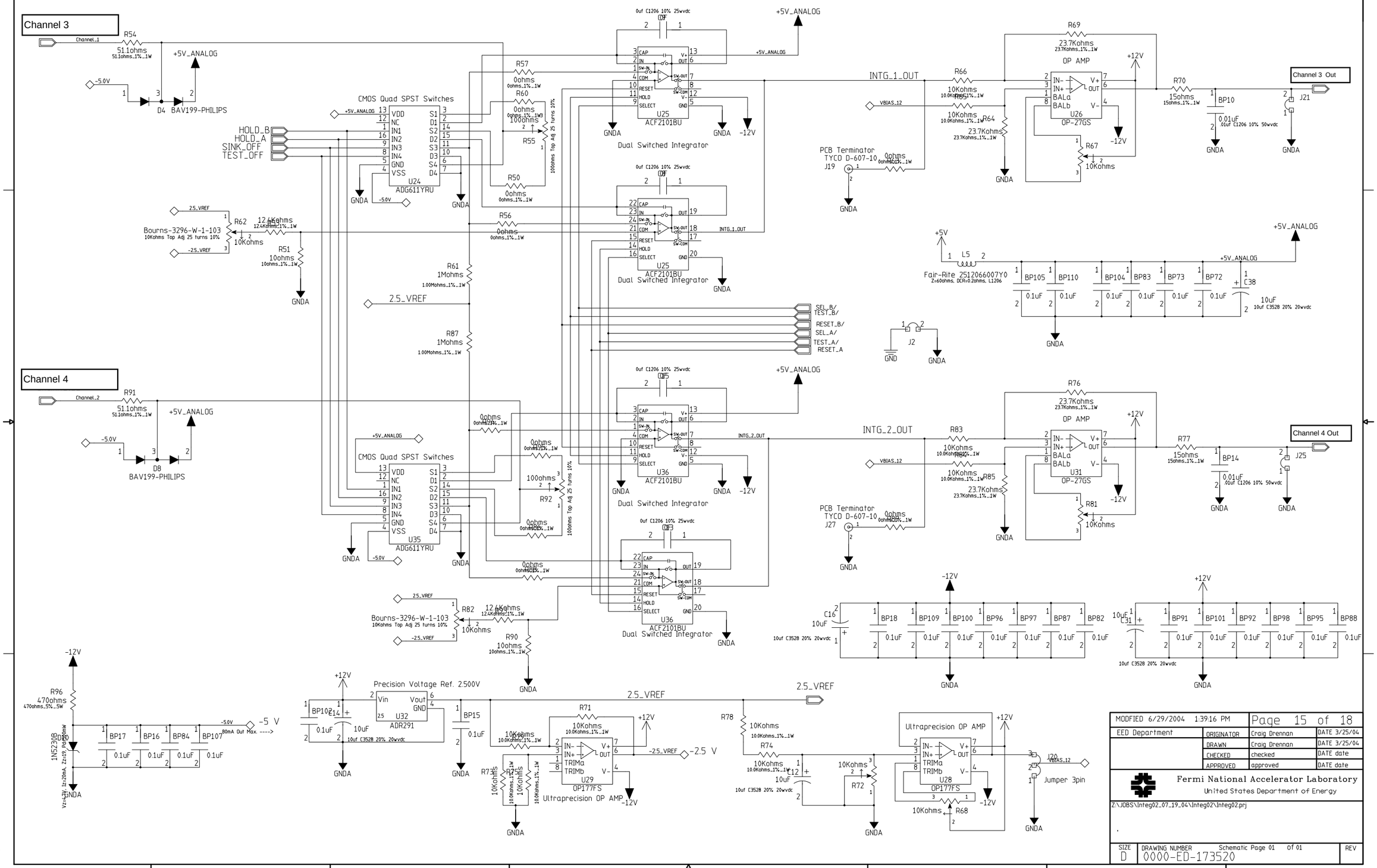
Channel 3
Channel 4
Channel 3 Out
Channel 4 Out
CMOS Quad SPST Switches
U24 ADG611YRU
U35 ADG611YRU
U25 ACF2101BU
U36 ACF2101BU
Dual Switched Integrator
U26 OP-27GS
U31 OP-27GS
U28 OP177FS
U29 OP177FS
Ultraprecision OP AMP
Precision Voltage Ref. 2.500V
U32 ADR291
Bourns-3296-W-1-103
PCB Terminator TYCO D-607-10
Fair-Rite 2512066007Y0
Jumper 3pin
MODIFIED 6/29/2004 1:39:16 PM
Page 15 of 18
EED Department
ORIGINATOR Craig Drennan DATE 3/25/04
DRAWN Craig Drennan DATE 3/25/04
CHECKED checked DATE date
APPROVED approved DATE date
Fermi National Accelerator Laboratory
United States Department of Energy
Z:\JOBS\Integ02_07_19_04\Integ02\Integ02.prj
SIZE D
DRAWING NUMBER 0000-ED-173520
Schematic Page 01 of 01
REV

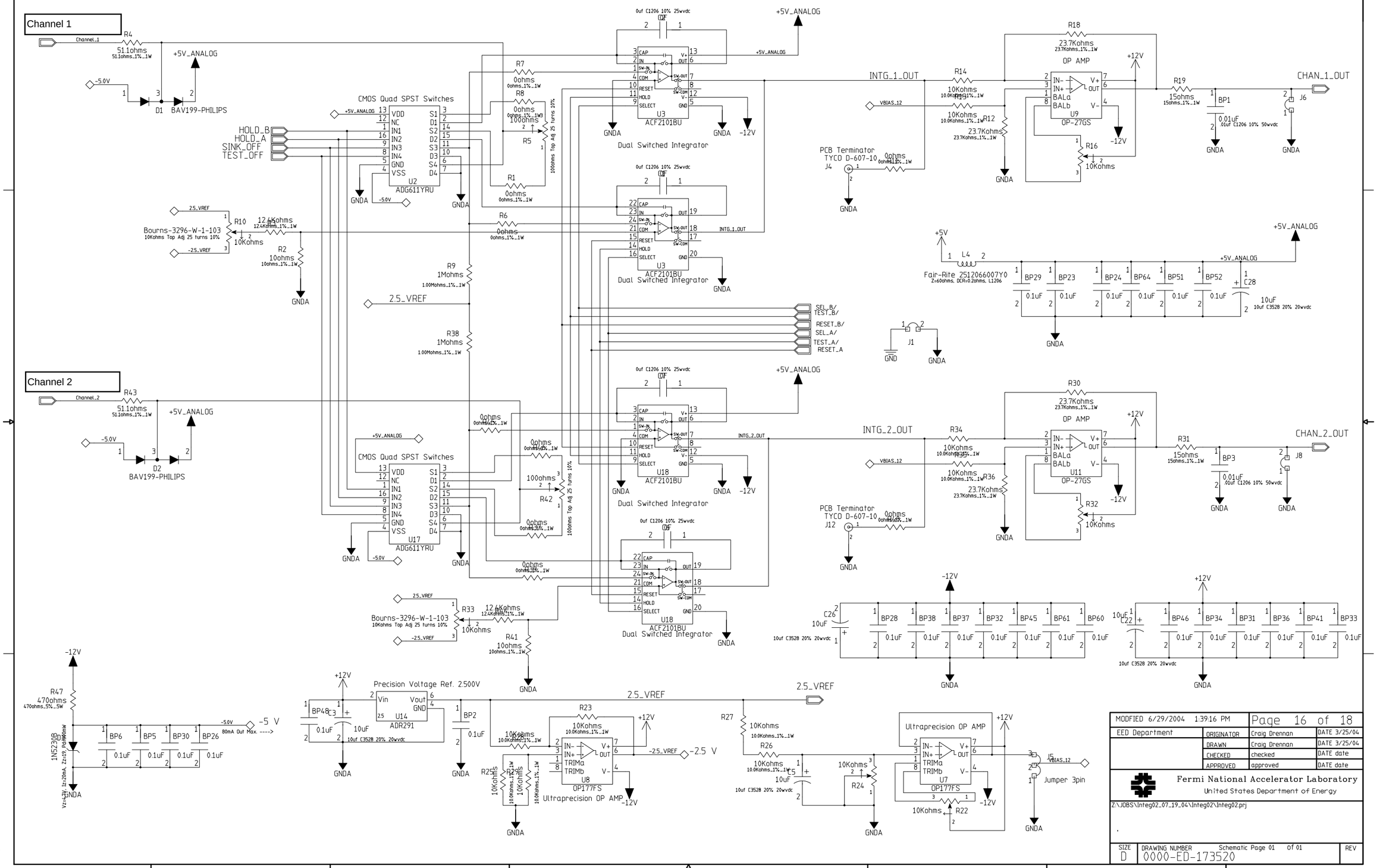
Channel 1
Channel 2
CMOS Quad SPST Switches
U2 ADG611YRU
U17 ADG611YRU
U3 ACF2101BU
U18 ACF2101BU
Dual Switched Integrator
OP AMP
U9 OP-27GS
U11 OP-27GS
INTG_1_OUT
INTG_2_OUT
CHAN_1_OUT
CHAN_2_OUT
PCB Terminator TYCO D-607-10
Bourns-3296-W-1-103
Fair-Rite 2512066007Y0
Precision Voltage Ref. 2.500V
U14 ADR291
U8 OP177FS
U7 OP177FS
Ultraprecision OP AMP
Jumper 3pin
MODIFIED 6/29/2004 1:39:16 PM
Page 16 of 18
EED Department
ORIGINATOR Craig Drennan DATE 3/25/04
DRAWN Craig Drennan DATE 3/25/04
CHECKED checked DATE date
APPROVED approved DATE date
Fermi National Accelerator Laboratory
United States Department of Energy
Z:\JOBS\Integ02_07_19_04\Integ02\Integ02.prj
SIZE D
DRAWING NUMBER 0000-ED-173520
Schematic Page 01 of 01
REV

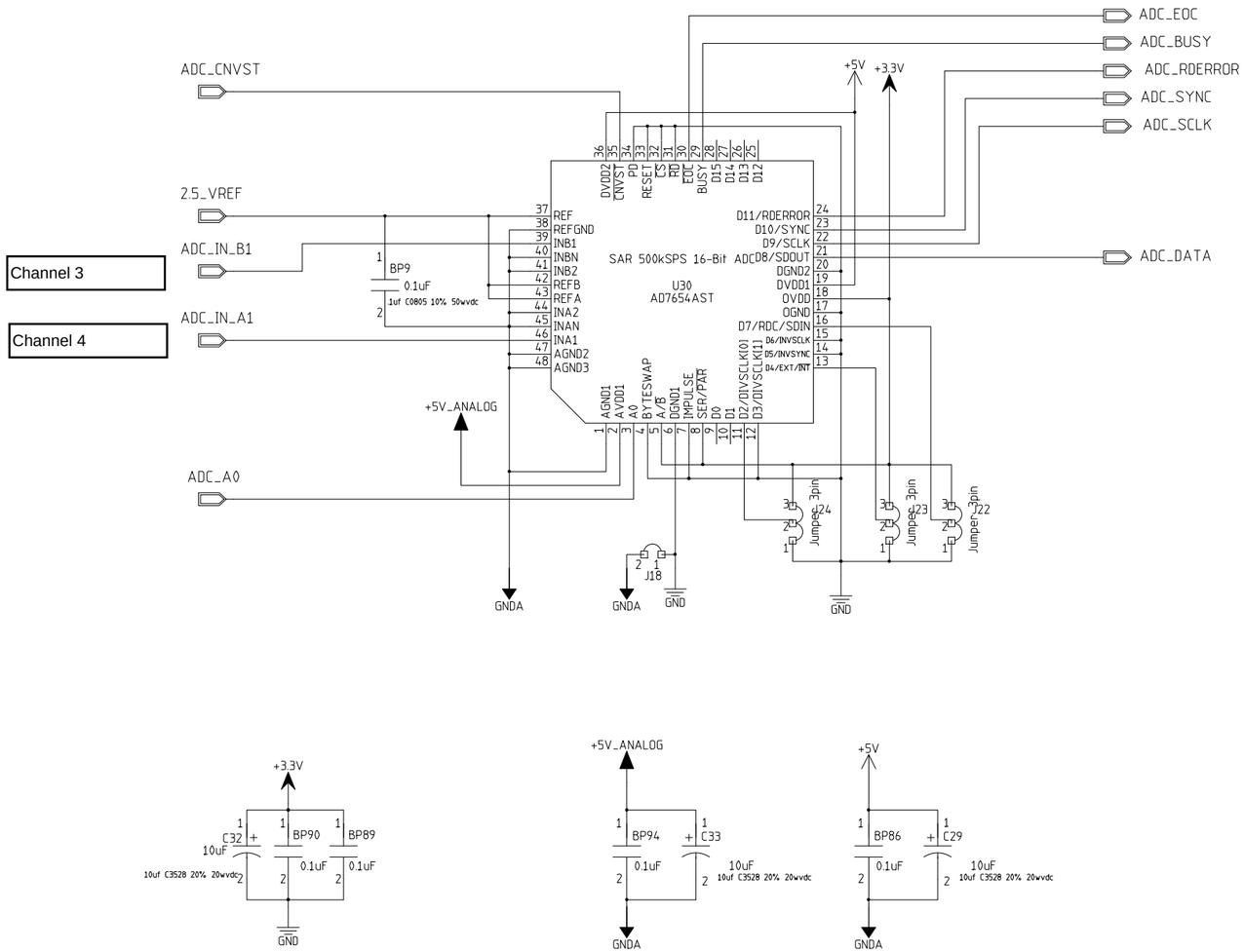


| | | | |
|---|---|---|---|
| MODFIED 6/18/2004 10:28:22 AM | | Page 17 of 18 | |
| EED Department | ORIGINATOR | Craig Drennan | DATE 3/25/04 |
| | DRAWN | Craig Drennan | DATE 3/25/04 |
| | CHECKED | checked | DATE date |
| | APPROVED | approved | DATE date |

Fermi National Accelerator Laboratory
United States Department of Energy

Z:\JOBS\Integ02_07_19_04\Integ02\Integ02.prj

| SIZE | DRAWING NUMBER | REV |
|---|---|---|
| D | 0000-ED-173520 Schematic Page 01 of 01 | |

H=8ND; V=4LA

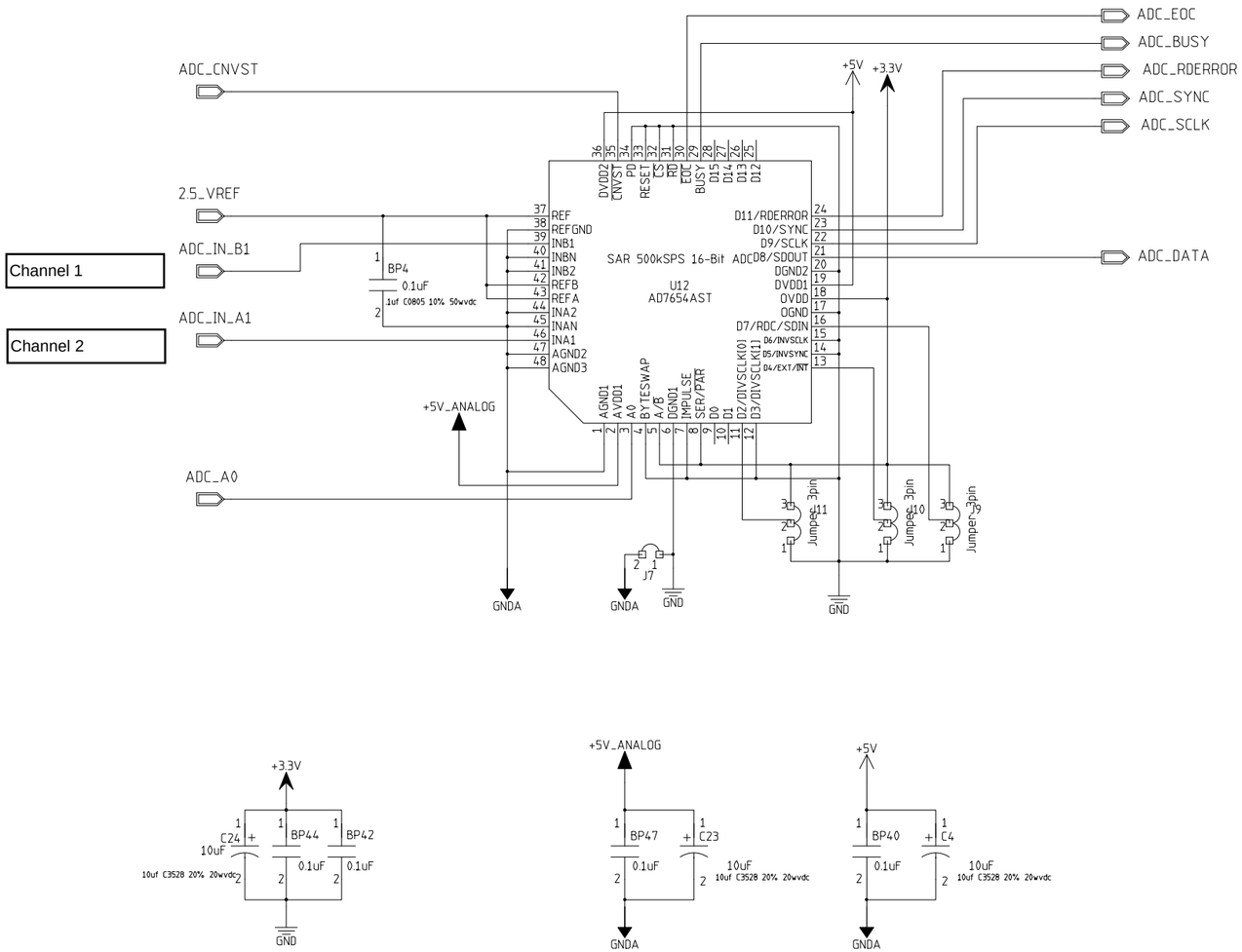


| | | | |
|---|---|---|---|
| MODFIED 6/18/2004 10:28:22 AM | | Page 18 of 18 | |
| EED Department | ORIGINATOR | Craig Drennan | DATE 3/25/04 |
| | DRAWN | Craig Drennan | DATE 3/25/04 |
| | CHECKED | checked | DATE date |
| | APPROVED | approved | DATE date |

Fermi National Accelerator Laboratory
United States Department of Energy

Z:\JOBS\Integ02_07_19_04\Integ02\Integ02.prj

| SIZE | DRAWING NUMBER | REV |
|---|---|---|
| D | 0000-ED-173520 Schematic Page 01 of 01 | |

H=8ND; V=4LA