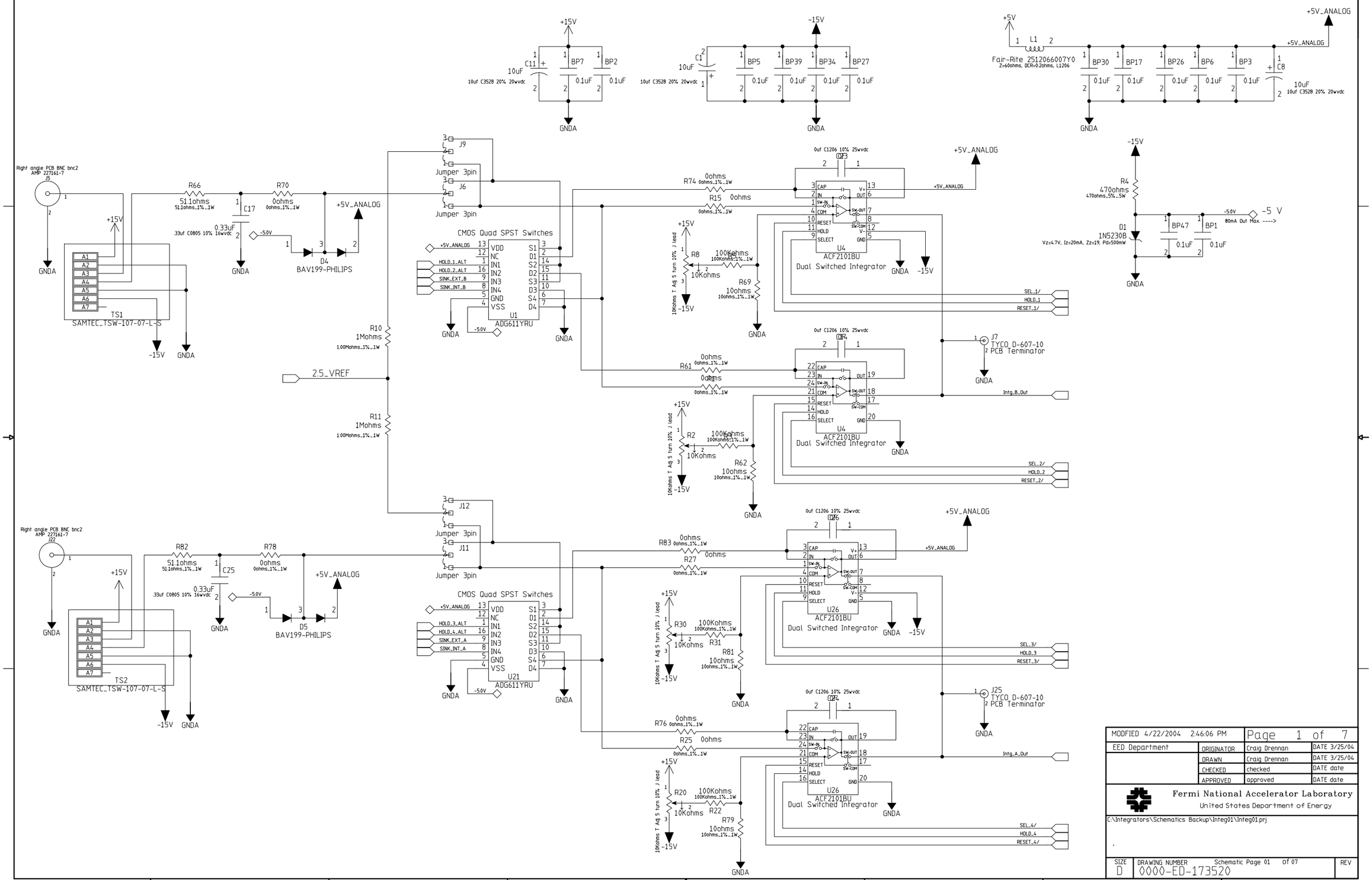

MODFIED 4/22/2004 2:46:06 PM		Page 1 of 7	
EED Department	ORIGINATOR	Craig Drennan	DATE 3/25/04
	DRAWN	Craig Drennan	DATE 3/25/04
	CHECKED	checked	DATE date
	APPROVED	approved	DATE date

Fermi National Accelerator Laboratory
United States Department of Energy

C:\Integrators\Schematics Backup\Integ01\Integ01.prj

SIZE	DRAWING NUMBER	REV
D	0000-ED-173520 Schematic Page 01 of 07	

H=8ND; V=4LA

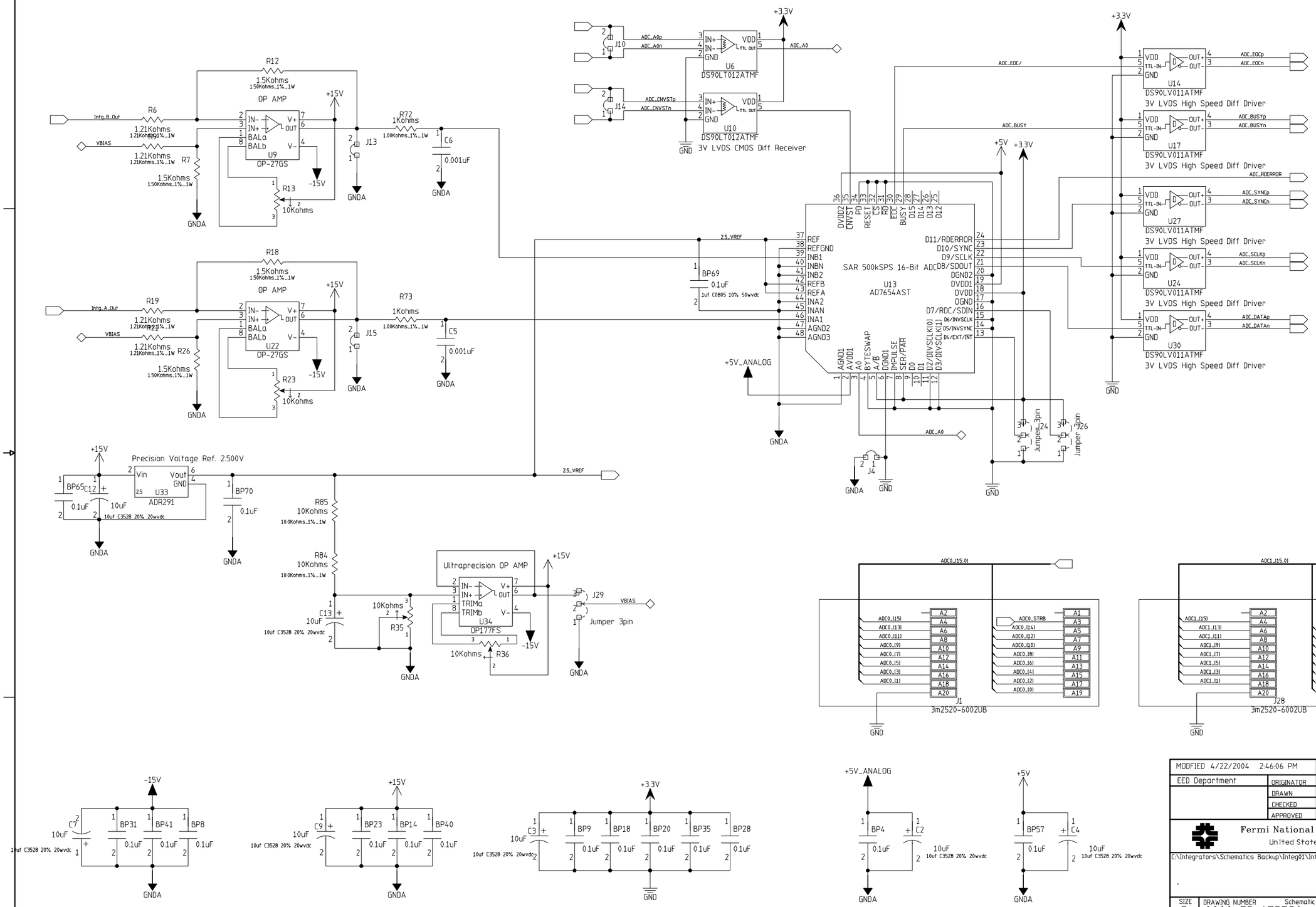

MODIFIED 4/22/2004 2:46:06 PM		Page 2 of 7	
EED Department	ORIGINATOR	Craig Drennan	DATE 3/25/04
	DRAWN	Craig Drennan	DATE 3/25/04
	CHECKED	checked	DATE date
	APPROVED	approved	DATE date

Fermi National Accelerator Laboratory
United States Department of Energy

C:\Integrators\Schematics Backup\Integ01\Integ01.prj

SIZE	DRAWING NUMBER	Schematic Page 02 of 07	REV
D	0000-ED-173520		

H=8ND; V=4LA

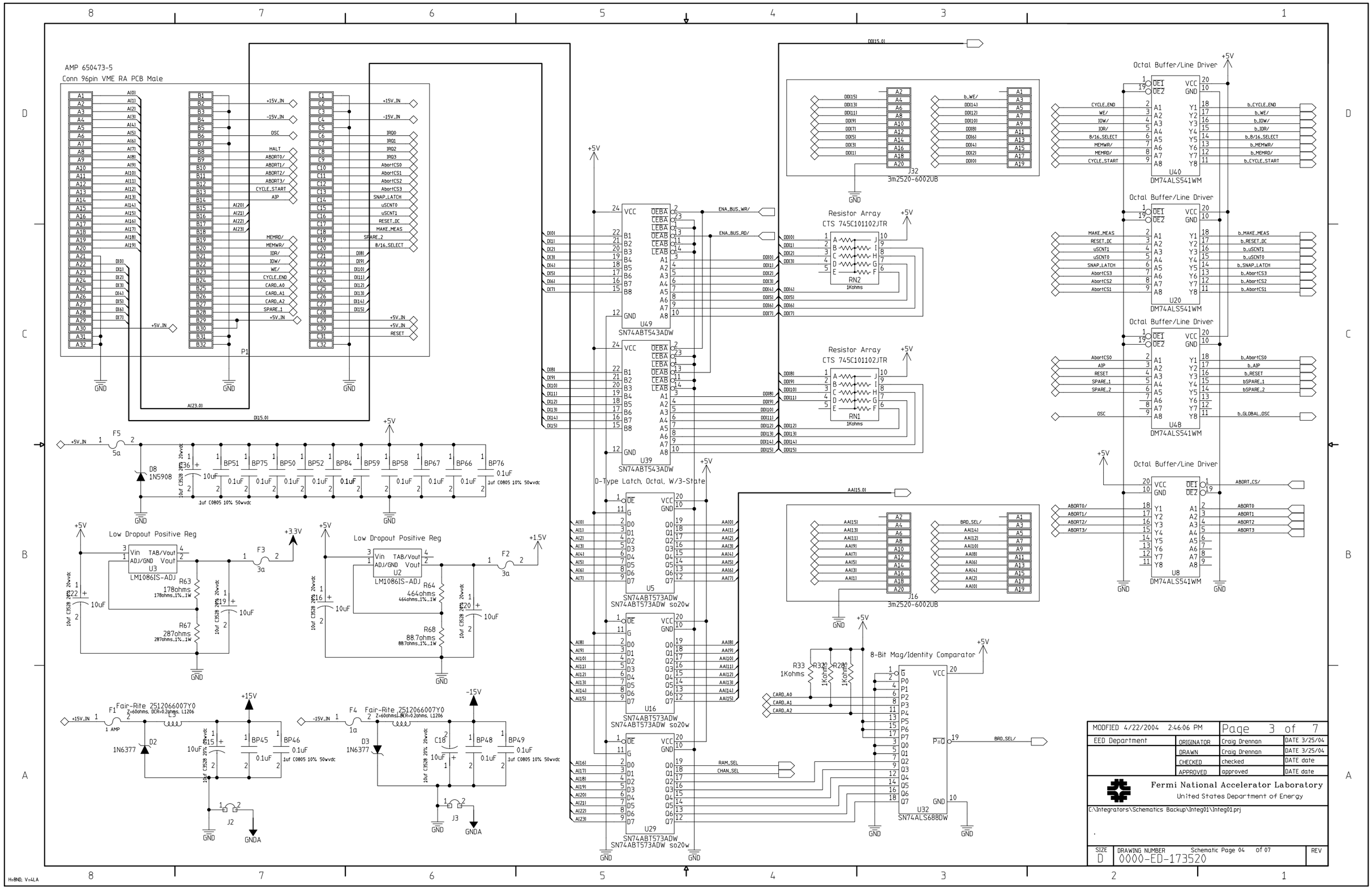
AMP 650473-5
Conn 96pin VME RA PCB Male
P1
GND
+15V_IN
-15V_IN
OSC
HALT
ABORT0/
ABORT1/
ABORT2/
ABORT3/
CYCLE_START
AIP
MEMRD/
MEMWR/
IOR/
IOW/
WE/
CYCLE_END
CARD_A0
CARD_A1
CARD_A2
SPARE_1
+5V_IN
IRQ0
IRQ1
IRQ2
IRQ3
AbortCS0
AbortCS1
AbortCS2
AbortCS3
SNAP_LATCH
uSCNT0
uSCNT1
RESET_DC
MAKE_MEAS
SPARE_2
8/16_SELECT
+5V_IN
+5V_IN
RESET
AI[23.0]
DI[15.0]
F5
5a
D8
1N5908
BP51
BP75
BP50
BP52
BP84
BP59
BP58
BP67
BP66
BP76
10uF
0.1uF
1uf C0805 10% 50wvdc
+5V
Low Dropout Positive Reg
U3
LM1086IS-ADJ
Vin
TAB/Vout
ADJ/GND
Vout
R63
178ohms
178ohms_1%_1W
R67
287ohms
287ohms_1%_1W
F3
3a
+3.3V
U2
LM1086IS-ADJ
R64
464ohms
464ohms_1%_1W
R68
88.7ohms
88.7ohms_1%_1W
F2
3a
+1.5V
F1
Fair-Rite 2512066007Y0
Z=60ohms, DCR=0.2ohms, L1206
1 AMP
D2
1N6377
BP45
BP46
J2
GNDA
-15V
F4
Fair-Rite 2512066007Y0
Z=60ohms, DCR=0.2ohms, L1206
1a
D3
1N6377
C18
BP48
BP49
J3
GNDA
U49
SN74ABT543ADW
U39
SN74ABT543ADW
D-Type Latch, Octal, W/3-State
U5
SN74ABT573ADW
SN74ABT573ADW so20w
U16
SN74ABT573ADW
SN74ABT573ADW so20w
U29
SN74ABT573ADW
SN74ABT573ADW so20w
ENA_BUS_WR/
ENA_BUS_RD/
RAM_SEL
CHAN_SEL
DI[15.0]
J32
3m2520-6002UB
Resistor Array
CTS 745C101102JTR
RN2
1Kohms
RN1
1Kohms
J16
3m2520-6002UB
AA[15.0]
8-Bit Mag/Identity Comparator
U32
SN74ALS688DW
R33
1Kohms
R32
1Kohms
R28
1Kohms
BRD_SEL/
Octal Buffer/Line Driver
U40
DM74ALS541WM
U20
DM74ALS541WM
U48
DM74ALS541WM
U8
DM74ALS541WM
ABORT_CS/
MODIFIED 4/22/2004 2:46:06 PM
Page 3 of 7
EED Department
ORIGINATOR Craig Drennan DATE 3/25/04
DRAWN Craig Drennan DATE 3/25/04
CHECKED checked DATE date
APPROVED approved DATE date
Fermi National Accelerator Laboratory
United States Department of Energy
C:\Integrators\Schematics Backup\Integ01\Integ01.prj
SIZE D
DRAWING NUMBER 0000-ED-173520
Schematic Page 04 of 07
REV
H=8ND; V=4LA

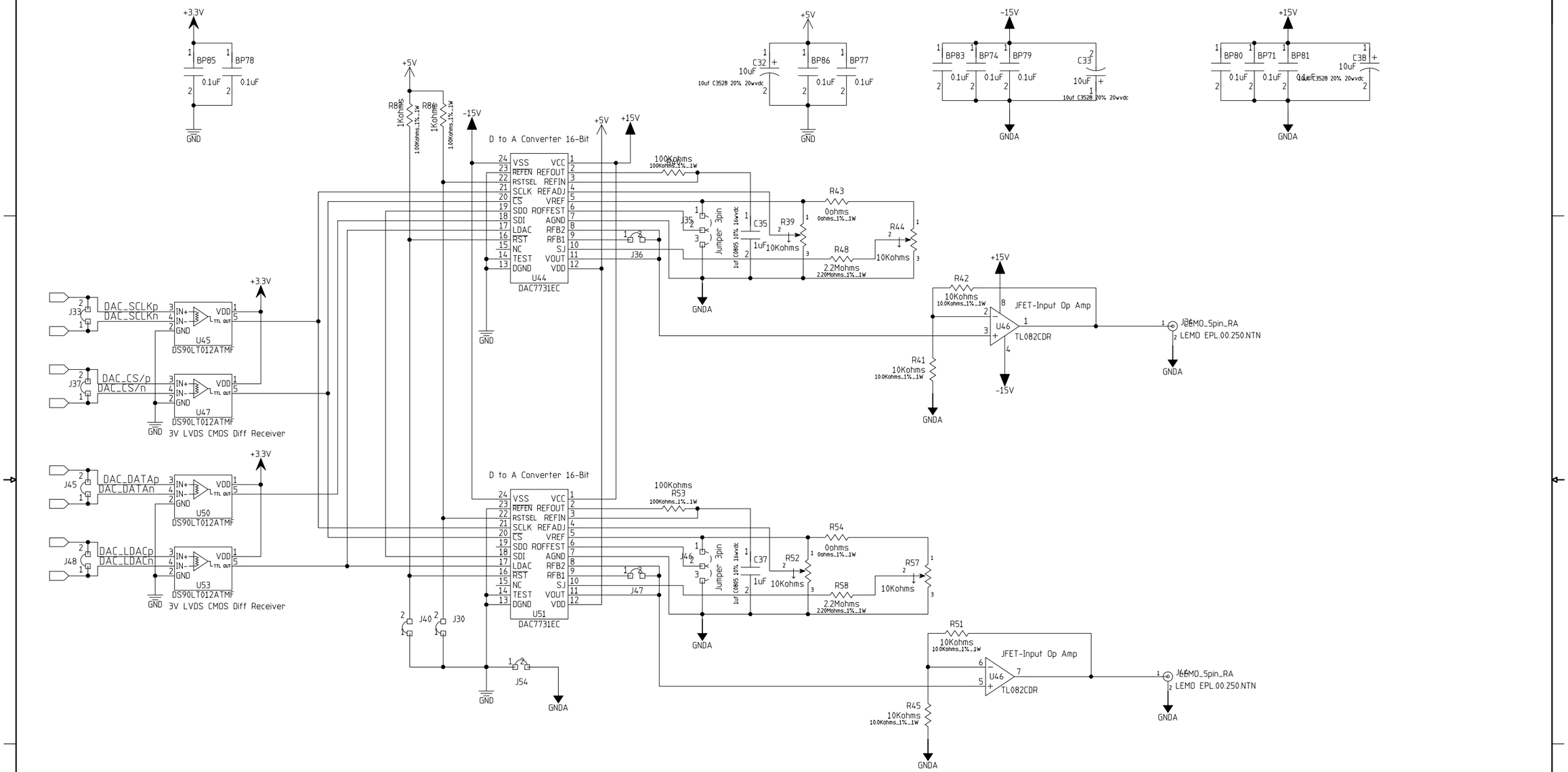

MODFIED 4/22/2004 2:46:06 PM	Page 4 of 7		
EED Department	ORIGINATOR	Craig Drennan	DATE 3/25/04
	DRAWN	Craig Drennan	DATE 3/25/04
	CHECKED	checked	DATE date
	APPROVED	approved	DATE date

Fermi National Accelerator Laboratory
United States Department of Energy

C:\Integrators\Schematics Backup\Integ01\Integ01.prj

SIZE	DRAWING NUMBER	REV
D	0000-ED-173520 Schematic Page 05 of 07	

H=8ND; V=4LA

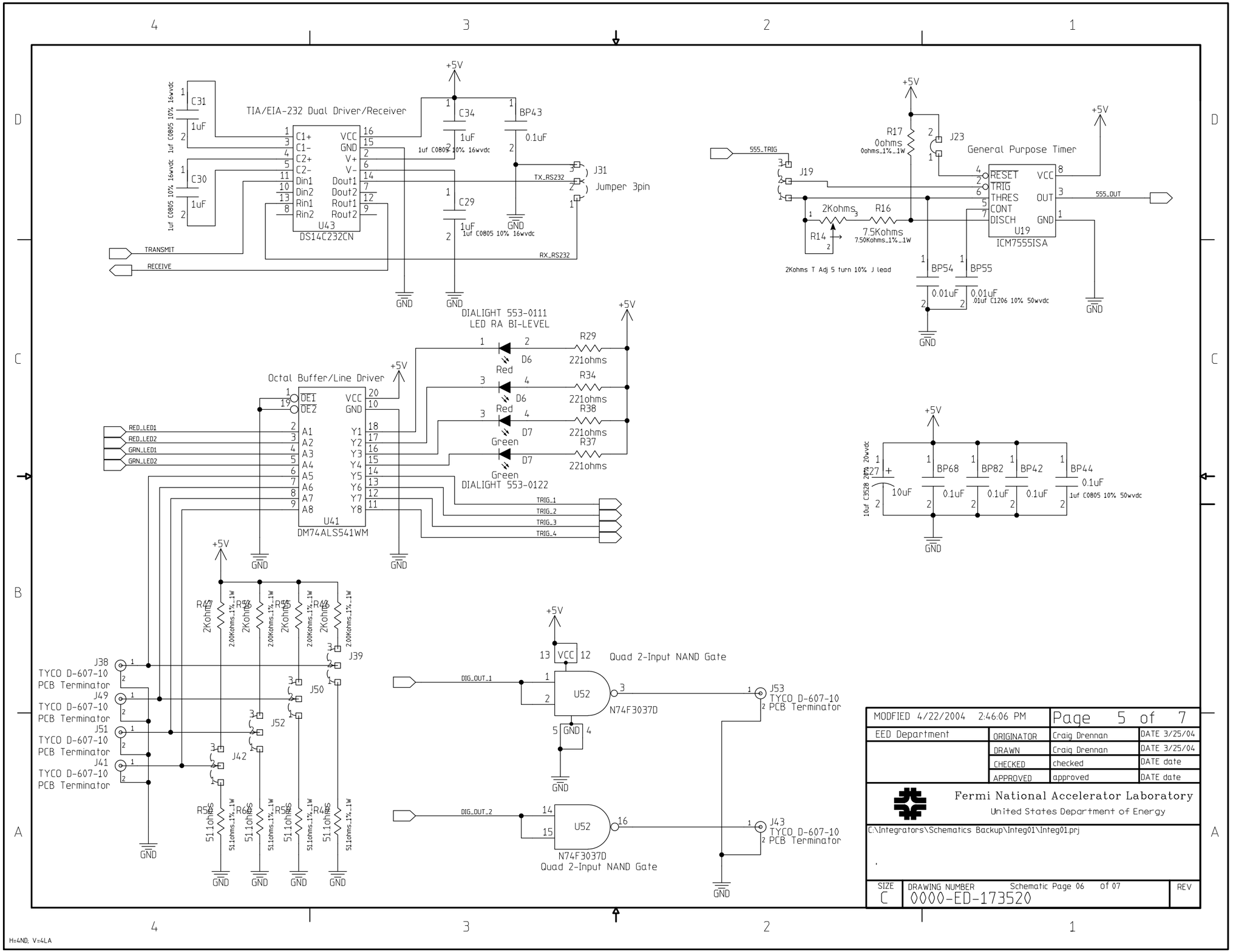
TIA/EIA-232 Dual Driver/Receiver
U43
DS14C232CN
C31
C30
C34
C29
BP43
J31
Jumper 3pin
TX_RS232
RX_RS232
TRANSMIT
RECEIVE
General Purpose Timer
U19
ICM7555ISA
555_TRIG
555_OUT
J19
J23
R17
R16
R14
2Kohms T Adj 5 turn 10% J lead
BP54
BP55
DIALIGHT 553-0111
LED RA BI-LEVEL
DIALIGHT 553-0122
Octal Buffer/Line Driver
U41
DM74ALS541WM
RED_LED1
RED_LED2
GRN_LED1
GRN_LED2
TRIG_1
TRIG_2
TRIG_3
TRIG_4
J38
J49
J51
J41
TYCO D-607-10
PCB Terminator
J39
J50
J52
J42
Quad 2-Input NAND Gate
U52
N74F3037D
DIG_OUT_1
DIG_OUT_2
J53
J43
BP68
BP82
BP42
BP44
MODFIED 4/22/2004 2:46:06 PM
Page 5 of 7
EED Department
ORIGINATOR Craig Drennan DATE 3/25/04
DRAWN Craig Drennan DATE 3/25/04
CHECKED checked DATE date
APPROVED approved DATE date
Fermi National Accelerator Laboratory
United States Department of Energy
C:\Integrators\Schematics Backup\Integ01\Integ01.prj
SIZE C
DRAWING NUMBER 0000-ED-173520
Schematic Page 06 of 07
REV
H=4ND; V=4LA

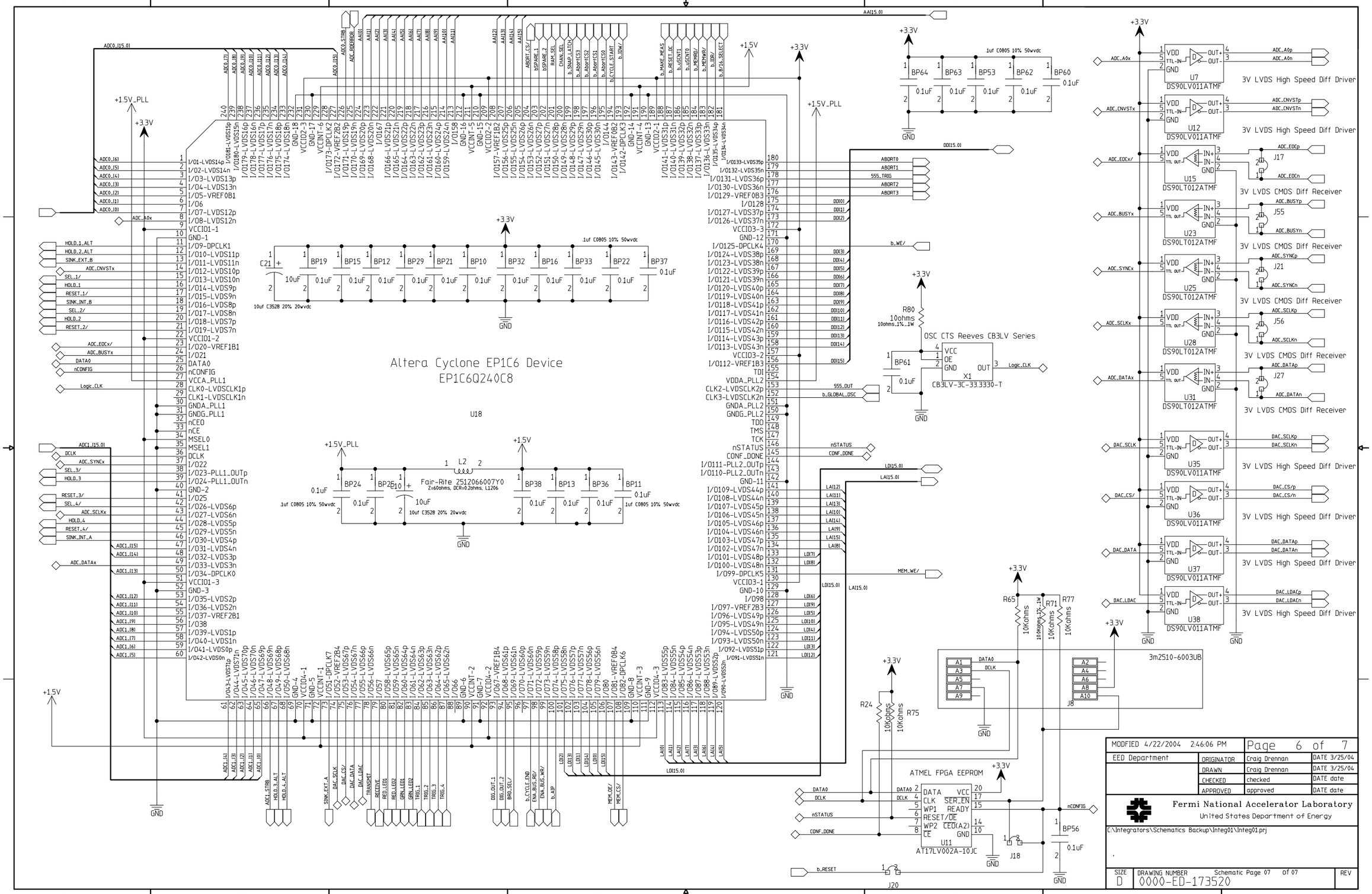
Altera Cyclone EP1C6 Device
EP1C6Q240C8
U18
Fair-Rite 2512066007Y0
Z=600ohms, DCR=0.20ohms, L1206
OSC CTS Reeves CB3LV Series
CB3LV-3C-33.3330-T
X1
ATMEL FPGA EEPROM
AT17LV002A-10JC
U11
3m2510-6003UB
J8
3V LVDS High Speed Diff Driver
DS90LV011ATMF
3V LVDS CMOS Diff Receiver
DS90LT012ATMF
MODIFIED 4/22/2004 2:46:06 PM
Page 6 of 7
EED Department
ORIGINATOR Craig Drennan DATE 3/25/04
DRAWN Craig Drennan DATE 3/25/04
CHECKED checked DATE date
APPROVED approved DATE date
Fermi National Accelerator Laboratory
United States Department of Energy
C:\Integrators\Schematics Backup\Integ01\Integ01.prj
SIZE D
DRAWING NUMBER 0000-ED-173520
Schematic Page 07 of 07
REV

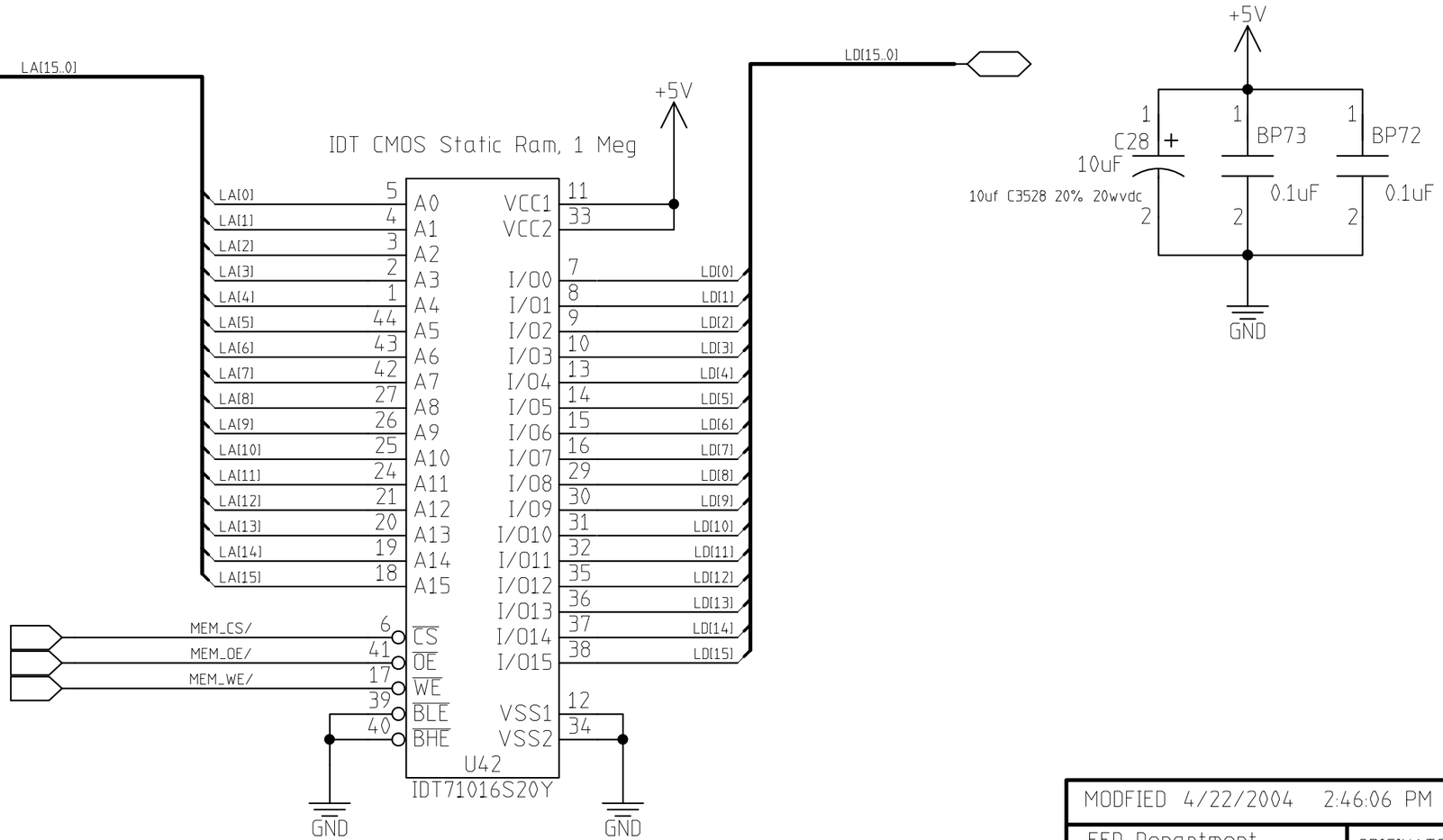

MODFIED 4/22/2004 2:46:06 PM		Page 7 of 7	
EED Department	ORIGINATOR	Craig Drennan	DATE 3/25/04
	DRAWN	Craig Drennan	DATE 3/25/04
	CHECKED	checked	DATE date
	APPROVED	approved	DATE date

Fermi National Accelerator Laboratory
United States Department of Energy

C:\Integrators\Schematics Backup\Integ01\Integ01.prj

SIZE	DRAWING NUMBER	REV
B	0000-ED-173520 Schematic Page 08 of 07	

H=2LA; V=2LA